AluTech® bond

Aluminium Composite Panel

# ALUMINIUM COMPOSITE PANEL TECHNICAL DATA SHEET

Sistem Al

ALÜMİNYUM

## CONTENTS

**1. GENERAL FEATURES OF ALUMINIUM COMPOSITE PANEL AND APPLICATION AREAS**
- 1.1 Why Alutechbond?
- 1.2 General Application Areas of Alutechbond

**2. PRODUCT RANGE**
- 2.1 Mineral Filled FR Products
- 2.2 Mineral Filled A2 Class Products
- 2.3 LDPE Core Products

**3. TOLERANCES FOR PRODUCT**
- 3.1 Dimensional Tolerances
- 3.2 Weight Tolerances

**4. PAINT TYPES AND SPECIFICATIONS**
- 4.1 Pvdf coating (2 Layer) test methods and specifications
- 4.2 Hdpe coating test methods and specifications
- 4.3 Polyester coating test methods and specifications

**5. PROCESSING METHODS**
- 5.1 Cutting
- 5.2 Grooving and Folding
  - 5.2.1 Grooving with portable hand saw
  - 5.2.2 Grooving with vertical saw machines
  - 5.2.3 Flat cutting machine
  - 5.2.4 Routing with CNC machines
  - 5.2.5 Folding
- 5.3 Punching
- 5.4 Perforation
- 5.5 Bending
  - 5.5.1 Bending with roll bending machine
  - 5.5.2 Bending with brake press
  - 5.5.3 Bending with folding machine

**6. JOINTING AND FIXING METHODS**
- 6.1 Thermal Expansion and Contraction
- 6.2 Drilling and Countersinking
- 6.3 Riveting
- 6.4 Screwing
- 6.5 Sticking

**7. ASSEMBLING METHODS**
- 7.1 Application with Notchnig
- 7.2 Clipping Application
- 7.3 Application with Joint Strip
- 7.4 Application with H Profile

**8. WATER PROOFING METHODS**
- 8.1 Open Grooved Solutions
- 8.2 Silicone Filled Solutions

**9. WIND LOAD AND STRES**

**10. PACKAGING-CARRYING AND STORING**

**11. PROTECTIVE FILM AND ASSEMBLING DIRECTION**

**12. CLEANING AND MAINTENANCE**

## 1. GENERAL FEATURES OF ALUMINIUM COMPOSITE PANEL AND APPLICATION AREAS

### 1.1 Why Alutechbond?

- Unlimited Color and Effect Option
- Super Fast Delivery
- Both Sides Coated Panels Available
- Flexibility on Special Dimension Production
- A2, B1 and LDPE types core options

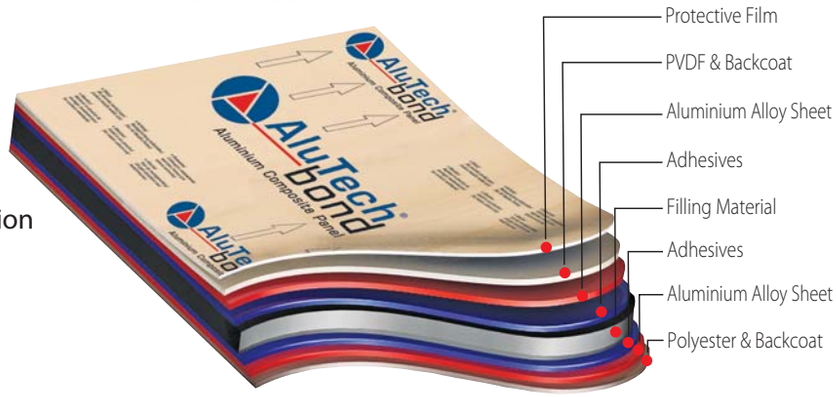


"Aluminium composite panel is composed of filling different types of core material between two aluminium sheets. It has superior surface resistance, smooth appearence, and it is aesthetic, durable and easy maintenance". Alutechbond, which consists of two aluminium sheets 0,5 mm thickness and there between low density polyethylene, is as rigid as the other sheets which are heavier than them.

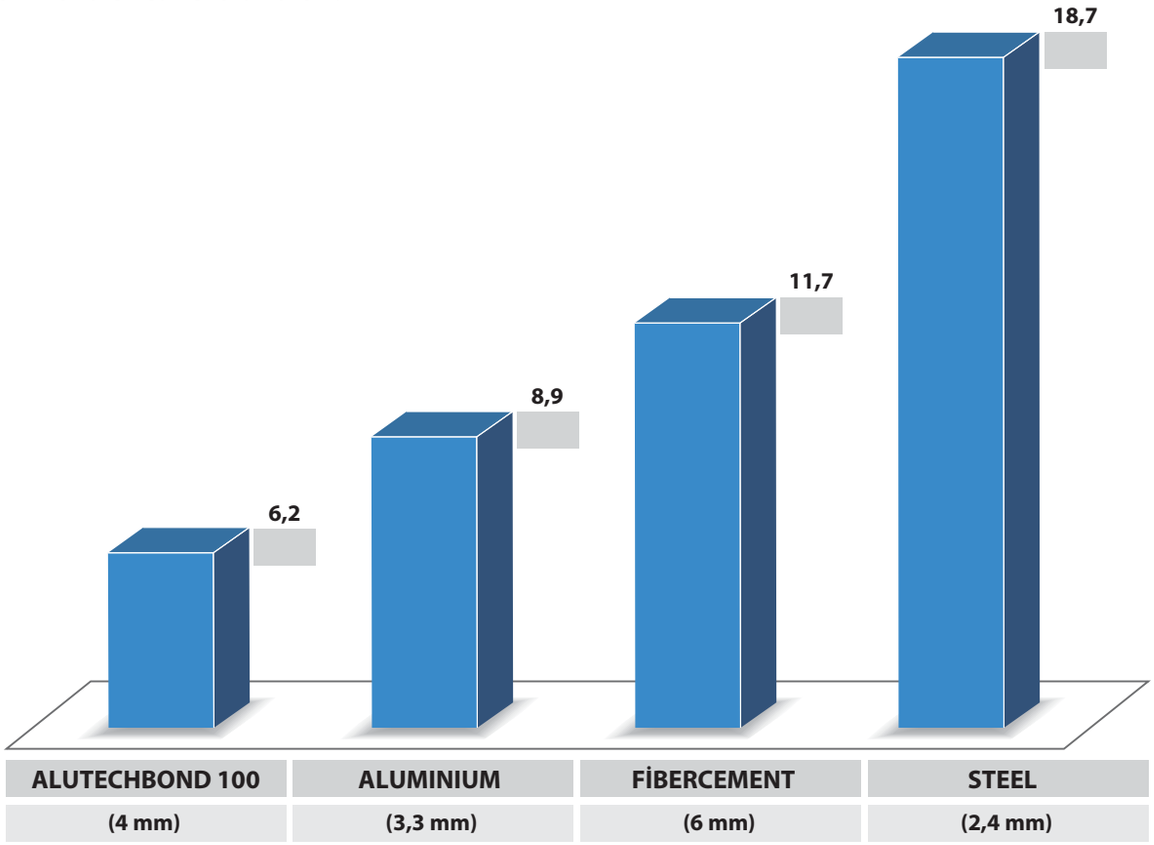


Rigidity Comparison

### General Features

- Highly durable rigid and light weight
- Unlimited color & design option
- Sound & heat isolation
- Resistant to all weather conditions
- Easy and fast application
- Aesthetic and elegant appearance
- Eco-Friendly. 100% recyclable

**1.2 General Application Areas of Alutechbond**

Alutechbond composite panels are especially preferable below given areas.

## 2. PRODUCT RANGE

Aluminium composite panels are produced with three different types of core material in our facilities.

- Mineral filled FR Core
- Mineral filled A2 Core
- Ldpe Core

| Feature | A2 s1 d0 | FR (B S1d0) | LDPE |
|---|---|---|---|
| | 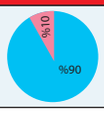  | 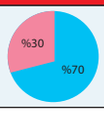  | 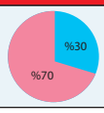  |
| Amount of inorganic materials | | > % 70 | 30% |
| Amount of polymer | < %10 | < 30% | 70% |
| Calorific heat potential of core material | ≤3MJ / kg | ≤14MJ / kg | ≤ 30 MJ / kg |

### 2.1 Mineral Filled Fire Retardant (FR) Products

Mineral filled composite panels are produced with three different brand in our factory according to EN 13501-1. These products especially preferred for their resistance to fire with middle level.

| Product | ALUTECH 100 B1 | ALUTECH 200 B1 | ALUTECH 300 B1 |
|---|---|---|---|
| Paint Type | Pvdf 2L | Hdpe | Hdpe |
| Alloy | 3003-3105-4115 | 3003-3105-4115 | 3003-3105-4115 |
| Temper of cover sheets | H46-H42 | H46-H42 | H46 |
| Thickness of aluminium coils (Top/Bottom) | 0,5 / 0,5 | 0,4 / 0,4 | 0,3 / 0,3 |
| Peeling Strenght | > 17,5 kgf/2,5cm | > 17,5 kgf/2,5cm | > 17,5 kgf/2,5cm |
| Witdh (mm) | 1000-1250-1500-2000 | 1000-1250-1500-2000 | 1000-1250-1500-2000 |
| Lenght (mm) | 2000-8000 | 2000-8000 | 2000-8000 |
| Yield strength | 42 N/ $mm^2$ | 38 N/ $mm^2$ | 26 N/ $mm^2$ |
| Tensile strength | 48 N/ $mm^2$ | 45 N/ $mm^2$ | 32 N/ $mm^2$ |
| Elongation at rupture | 19,3 ( l0=5,65 A012- % ) | 14 ( l0=5,65 A012- % ) | 12 ( l0=5,65 A012- % ) |
| Seperation | 13,5 N/mm | 12,90 N/mm | 12,15 N/mm |
| Bending strength | 106 Mpa | 101 Mpa | 97 Mpa |
| Bending elastic modulus | 9992 Mpa | 9870 Mpa | 9601 Mpa |
| Tensile strength in high temperature | 8,09 Mpa | 8,09 Mpa | 8,09 Mpa |
| Heat transfer coefficient | 5,5 (Wm2/K) | 5,5 (Wm2/K) | 5,5 (Wm2/K) |
| Sound insulation | ≥24 dB | ≥27 dB | ≥35 dB |
| Rigidity (4 mm) | 0.354 kN $m^2$/m | 0.354 kN $m^2$/m | 0.354 kN $m^2$/m |
| Section modulus (4 mm) | 2,58 $cm^3$/m | 2,58 $cm^3$/m | 2,58 $cm^3$/m |
| Rigidity (3 mm) | 0.177 kN $m^2$/m | 0.177 kN $m^2$/m | 0.177 kN $m^2$/m |
| Section modulus (3 mm) | 1,65 $cm^3$/m | 1,65 $cm^3$/m | 1,65 $cm^3$/m |

## 2.2 Mineral Filed A2 Class Products

A2 class composite panels are produced under two different brand in our facilities. Using the A2 class aluminium composite panels become an obligation in most of countries for the facade above 20 meter. Fire retardancy behaviour of A2 class panels are highly superior than the B1 class panels.

| Product | ALUTECH 100 A2 | ALUTECH 200 A2 |
|---|---|---|
| Paint Type | Pvdf 2L | Hdpe |
| Alloy | 3003-3105-4115 | 3003-3105-4115 |
| Temper of cover sheets | H46-H42 | H46-H42 |
| Thickness of aluminium coils (Top/Bottom) | 0,5 / 0,5 | 0,4 / 0,4 |
| Peeling Strenght | > 15 kgf/2,5cm | > 15 kgf/2,5cm |
| Witdh (mm) | 1000-1250-1500 | 1000-1250-1500 |
| Lenght (mm) | 2000-6000 | 2000-6000 |
| Yield strength | 42 N/ $mm^2$ | 38 N/ $mm^2$ |
| Tensile strength | 48 N/ $mm^2$ | 45 N/ $mm^2$ |
| Elongation at rupture | 19,3 ( l0=5,65 A012- % ) | 14 ( l0=5,65 A012- % ) |
| Seperation | 13,5 N/mm | 12,90 N/mm |
| Bending strength | 106 Mpa | 101 Mpa |
| Bending elastic modulus | 9992 Mpa | 9870 Mpa |
| Tensile strength in high temperature | 8,09 Mpa | 8,09 Mpa |
| Heat transfer coefficient | 5,80 (Wm2/K) | 5,8 (Wm2/K) |
| Sound insulation | ≥24 dB | ≥27 dB |
| Rigidity (4 mm) | 0.354 kN $m^2$/m | 0.354 kN $m^2$/m |
| Section modulus (4 mm) | 2,58 $cm^3$/m | 2,58 $cm^3$/m |
| Rigidity (3 mm) | 0.177 kN $m^2$/m | 0.177 kN $m^2$/m |
| Section modulus (3 mm) | 1,65 $cm^3$/m | 1,65 $cm^3$/m |

## 2.3 LDPE Core Products

Aluminum composite panels with LDPE core are produced under four different brand for the applications that fire retardancy is not expected. Prefering A2 class or B1 class ACP for facade application is highly recommended rather than using ACP which have a LDPE core material for safety.

| Product | ALUTECH 100 | ALUTECH 200 | ALUTECH 300 | ALUTECH 400 |
|---|---|---|---|---|
| Paint Type | Pvdf | Hdpe | Hdpe | Hdpe |
| Alloy | 3003-3105-4115 | 3003-3105-4115 | 3003-3105 | 3003 |
| Temper of cover sheets | H46-H44-H42 | H46-H44-H42 | H46 | H44 |
| Thickness of aluminium coils (Top/Bottom) | 0,5 / 0,5 | 0,4 / 0,4 | 0,3 / 0,3 | 0,21 / 0,21 |
| Peeling Strenght | > 17,5 kgf/2,5cm | > 17,5 kgf/2,5cm | > 17,5 kgf/2,5cm | > 17,5 kgf/2,5cm |
| Witdh (mm) | 1000-1250-1500-2000 | 1000-1250-1500-2000 | 1000-1250-1500-2000 | 1000-1250-1500-2000 |
| Lenght (mm) | 2000-6000 | 2000-6000 | 2000-6000 | 2000-6000 |
| Yield strength | 42 N/ $mm^2$ | 38 N/ $mm^2$ | 26 N/ $mm^2$ | 26 N/ $mm^2$ |
| Tensile strength | 48 N/ $mm^2$ | 45 N/ $mm^2$ | 32 N/ $mm^2$ | 32 N/ $mm^2$ |
| Elongation at rupture | 19,3 ( l0=5,65 A012- % ) | 14 (l0=5,65 A012- %) | 12 (l0=5,65 A012- %) | 12 (l0=5,65 A012- %) |
| Seperation | 13,5 N/mm | 12,90 N/mm | 12,15 N/mm | 12,15 N/mm |
| Bending strength | 106 Mpa | 101 Mpa | 97 Mpa | 97 Mpa |
| Bending elastic modulus | 9992 Mpa | 9870 Mpa | 9601 Mpa | 9601 Mpa |
| Tensile strength in high temperature | 8,09 Mpa | 8,09 Mpa | 8,09 Mpa | 8,09 Mpa |
| Heat transfer coefficient | 5,5 (Wm2/K) | 5,5 (Wm2/K) | 5,5 (Wm2/K) | 5,5 (Wm2/K) |
| Sound insulation | ≥24 dB | ≥27 dB | ≥35 dB | ≥35 dB |
| Rigidity (4 mm) | 0.354 kN $m^2$/m | 0.354 kN $m^2$/m | 0.354 kN $m^2$/m | 0.354 kN $m^2$/m |
| Section modulus (4 mm) | 2,58 $cm^3$/m | 2,58 $cm^3$/m | 2,58 $cm^3$/m | 2,58 $cm^3$/m |
| Rigidity (3 mm) | 0.177 kN $m^2$/m | 0.177 kN $m^2$/m | 0.177 kN $m^2$/m | 0.177 kN $m^2$/m |
| Section modulus (3 mm) | 1,65 $cm^3$/m | 1,65 $cm^3$/m | 1,65 $cm^3$/m | 1,65 $cm^3$/m |

## 3. TOLERANCES FOR PRODUCT

### 3.1 Dimensional Tolerances

Dimensional tolerances for aluminium composite panel is below given table.

| Dimensions | Tolerances |
|---|---|
| Panel Thickness (mm) | + / - 0,2 mm |
| Panel Lenght (mm) | 2000 - 8000 mm (± 1mm / m) |
| Width of Panel (mm) | - 0 /+ 4 mm |
| Squareness Tolerance (mm) | Max 5 mm |
| Curvature | Panel Boyu 1000 mm - 1500 mm: Max. 5 mm |
| | Panel Boyu 1500 mm - 3000 mm: Max. 7 mm |
| | Panel Boyu >3000 mm: Max. 10 mm |

### 3.2 Weight Tolerances

Weight informations belong to aluminium composite panels can be found in below given table

| Weights of Panels (Kg/m²) | | | | |
|---|---|---|---|---|
| **Product** | **Panel Thickness (mm)** | **A2** | **B1** | **LDPE** |
| AluTech bond Aluminium Composite Panel / 100 | 2 | - | - | 3,83 |
| | 3 | - | 5,77 | 5,01 |
| | 4 | 8,37 | 7,33 | 6,19 |
| | 5 | - | 8,89 | 7,37 |
| | 6 | - | 10,45 | 8,55 |
| AluTech bond Aluminium Composite Panel / 200 | 2 | - | - | 3,53 |
| | 3 | - | 5,54 | 4,71 |
| | 4 | 7,82 | 7,10 | 5,89 |
| | 5 | - | 8,66 | 7,07 |
| | 6 | - | 10,22 | 8,25 |
| AluTech bond Aluminium Composite Panel / 300 | 2 | - | - | 3,22 |
| | 3 | - | 5,31 | 4,40 |
| | 4 | - | 6,87 | 5,58 |
| | 5 | - | 8,43 | 6,76 |
| | 6 | - | 9,99 | 7,94 |
| AluTech bond Aluminium Composite Panel / 400 | 2 | - | - | 2,95 |
| | 3 | - | 5,11 | 4,13 |
| | 4 | - | 6,67 | 5,31 |
| | 5 | - | 8,23 | 6,49 |
| | 6 | - | 9,79 | 7,67 |
| **Due to thickness tolerance of ACP, weight of panels can be changed +/- 0,24 kg/m²** | | | | |

## 4. PAINT TYPES AND SPECIFICATIONS

Type of paint should be determined according to application areas for ACP. Polyester, Hdpe and Pvdf painted aluminium coils are currently used in our facilities. Type of paints except these groups can be used according to customer request. If we need to give brief comparison between paint types, the application which needs resistance in long therm against atmospheric conditions should be choosed Pvdf paint on the other hand the application which needs scratch resistance or repaintability or low price should be choose polyester paint. Hdpe painted coils are preferred for the applications which have suitable technical expectations between Pvdf and Polyester paint.

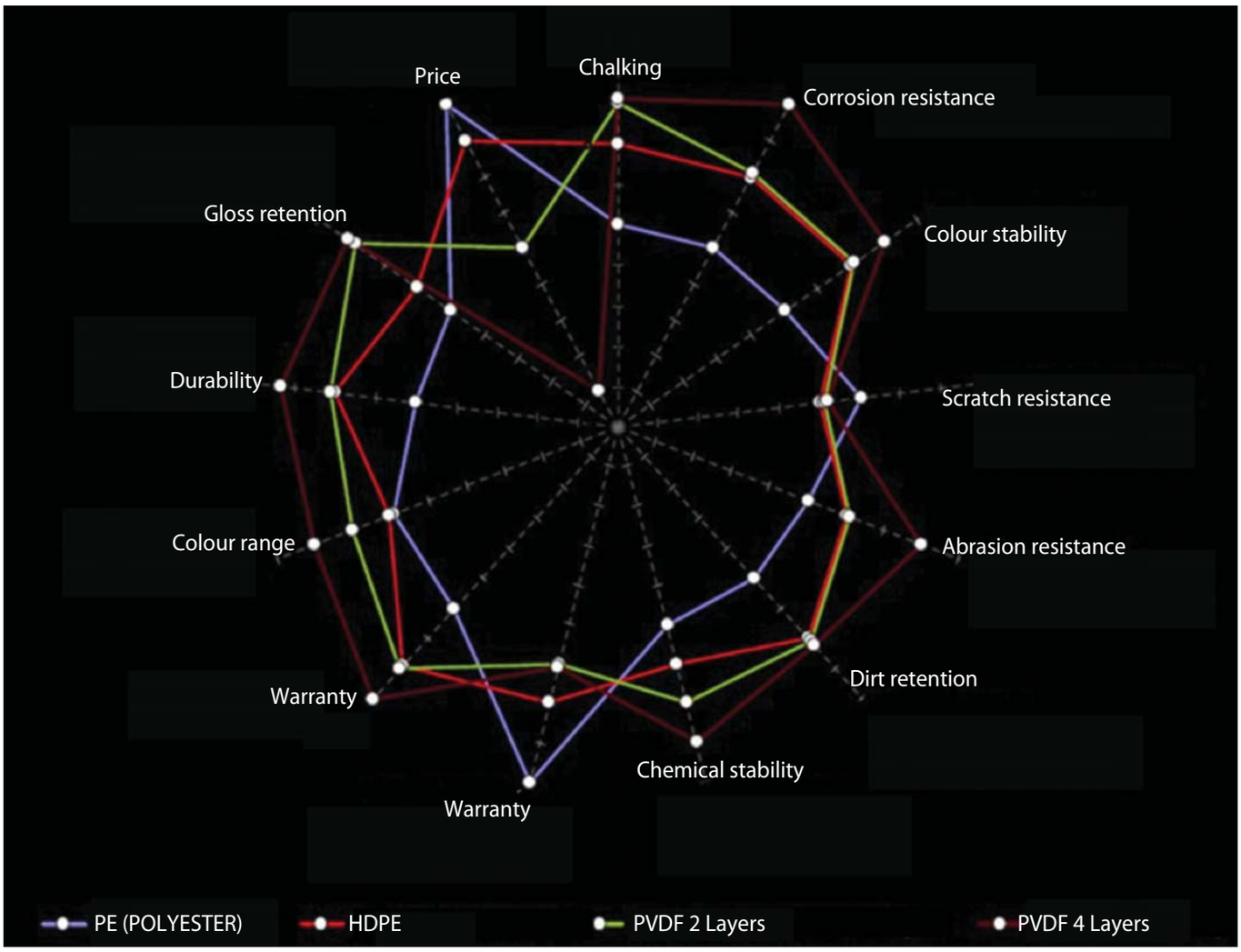


Comparisons of paint types

## 4.1 Pvdf coating (2 Layer) test methods and specifications

| TOPCOAT TYPE | PVDF Polyvinyldifluoride Coating (%70) | |
|---|---|---|
| PRIMER TYPE | Polyester Primer | |
| Test Types | Standard | PVDF COATING 2L |
| Topcoat Dry Film Thickness (µm) | EN 13523-1 | 20µ +/- 2µ |
| Primer Dry Film Thickness (µm) | EN 13523-1 | 5µ +/- 2µ |
| Backoat Dry Film Thickness (µm) | EN 13523-1 | 7µ +/- 2µ |
| Topcoat Colour Difference (ΔE) | EN 13523-3 | ΔE < 1 (Solid colors) ΔE < 2 Metallic colors |
| 60° Topcoat Gloss | EN 13523-2 | Semi Matt:23-40 |
| 60° Backcoat Gloss | EN 13523-2 | Topcoat gloss +/- 20 |
| Topcoat Solvent Resistance Test | EN 13523-11 | > 100 Double Rubb |
| Backcoat Solvent Resistance Test | EN 13523-11 | > 40 Double Rubb |
| Topcoat Adhesion After Indentation | EN 13523-6 | % 0 No peel After cupping Min 4,5 mm |
| Topcoat Pencil Hardness | EN 13523-4 | Min HB |
| Topcoat T - Bend Test | EN 13523-7 | Max 2,5 T (Depending on Metal Quality) |
| Uv Resistance UV-A-340- D65/10° | EN 13523-10 | 2000 Hrs ( ΔE < 5Gloss %50) |
| Humidity Resistance | EN 13523-25 | 1000 Hrs No influence |
| Salt Spray Test Resistance (%0,2 acetic acid, %5 NaCl) | EN 13523-8 | 500 Hrs (Less than 3 mm or 2 mm respectively of under creep corrosion |
| Uv Resistance Category | EN 1396 | RUV 4 |
| Corrosion Resistance Category | EN 1396 | RC 3 |

## 4.2 Hdpe coating test methods and specifications

| TOPCOAT TYPE | High Durable Polyester Coating | |
|---|---|---|
| PRIMER TYPE | Polyester Primer | |
| Test Types | Standard | HDPE COATING 2L |
| Topcoat Dry Film Thickness (µm) | EN 13523-1 | 20µ +/- 2µ |
| Primer Dry Film Thickness (µm) | EN 13523-1 | 5µ +/- 2µ |
| Backoat Dry Film Thickness (µm) | EN 13523-1 | 7µ +/- 2µ |
| Topcoat Colour Difference (ΔE) | EN 13523-3 | ΔE < 1 (Solid colors) ΔE < 2 Metallic colors |
| 60° Topcoat Gloss | EN 13523-2 | Matt: 0-20 / Semi Matt: 20-40 / Semi Gloss: 40-60 / Gloss: 60-80 / High Gloss > 80 |
| 60° Backcoat Gloss | EN 13523-2 | Topcoat gloss +/- 20 |
| Topcoat Solvent Resistance Test | EN 13523-11 | > 100 Double Rubb |
| Backcoat Solvent Resistance Test | EN 13523-11 | > 40 Double Rubb |
| Topcoat Adhesion After Indentation | EN 13523-6 | % 0 No peel After cupping Min 4,5 mm |
| Topcoat Pencil Hardness | EN 13523-4 | Min F |
| Topcoat T - Bend Test | EN 13523-7 | Max 2,5 T (Depending on Metal Quality) |
| Uv Resistance UV-A-340- D65/10° | EN 13523-10 | 2000 Hrs ( ΔE < 5Gloss %50) |
| Humidity Resistance | EN 13523-25 | 1000 Hrs No influence |
| Salt Spray Test Resistance (%0,2 acetic acid, %5 NaCl) | EN 13523-8 | 500 Hrs (Less than 3 mm or 2 mm respectively of under creep corrosion |
| Uv Resistance Category | EN 1396 | RUV 4 |
| Corrosion Resistance Category | EN 1396 | RC 3 |

### 4.3 Polyester coating test methods and specifications

| TOPCOAT TYPE | Polyester Coating | |
|---|---|---|
| PRIMER TYPE | Polyester Primer | |
| Test Type | Standard | POLYESTER COATING |
| Topcoat Dry Film Thickness (µm) | EN 13523-1 | 20µ +/- 2µ |
| Primer Dry Film Thickness (µm) | EN 13523-1 | 5µ +/- 2µ |
| Backoat Dry Film Thickness (µm) | EN 13523-1 | 7µ +/- 2µ |
| Topcoat Colour Difference (ΔE) | EN 13523-3 | ΔE < 1 (Solid colors) ΔE < 2 Metallic colors |
| 60° Topcoat Gloss | EN 13523-2 | Matt: 0-20 / Semi Matt:20-40 / Semi Gloss: 40-60/ Gloss: 60-80 / High Gloss > 80 |
| 60° Backcoat Gloss | EN 13523-2 | Topcoat gloss +/- 20 |
| Topcoat Solvent Resistance Test | EN 13523-11 | > 100 Double Rubb |
| Backcoat Solvent Resistance Test | EN 13523-11 | > 40 Double Rubb |
| Topcoat Adhesion After Indentation | EN 13523-6 | % 0 No peel After cupping Min 4,5 mm |
| Topcoat Pencil Hardness | EN 13523-4 | Min F |
| Topcoat T - Bend Test | EN 13523-7 | Max 2,5 T (Depending on Metal Quality) |
| Uv Resistance UV-A-340- D65/10° | EN 13523-10 | 2000 Hrs ( ΔE < 5Gloss %50) |
| Humidity Resistance | EN 13523-25 | 1000 Hrs No influence |
| Salt Spray Test Resistance (%0,2 acetic acid, %5 NaCl) | EN 13523-8 | 500 Hrs (Less than 3 mm or 2 mm respectively of under creep corrosion |
| Uv Resistance Category | EN 1396 | RUV 4 |
| Corrosion Resistance Category | EN 1396 | RC 3 |

## 5. PROCESSING METHODS

Main processing methods on aluminium composite panels are cutting , grooving and folding,punching, perforating and bending.

### 5.1 Cutting

Cutting process can be done by using a guillotine or saw machine. One of the most important point is choosing a carbide tipped saw in order to cut properly. By shearing, it is impossible to avoid 1 or 2 degrees of heaving at the edge of composite panels. In order to prevent surface defects and ridges, protective foil shouldn't be removed from the surface of composite panels and the cut pieces should be removed and environment should be cleaned. Cut edges can be smoothened by rubbing with sandpaper.

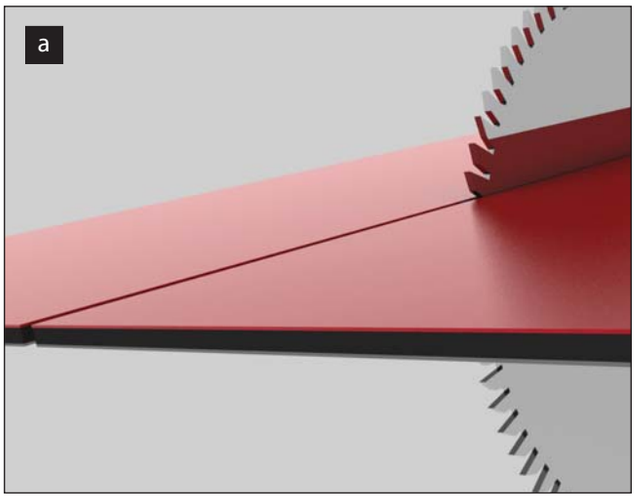


a) Sawing

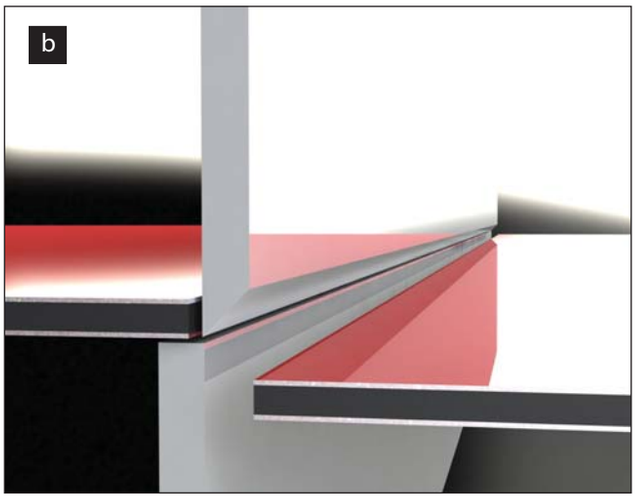


b) Cutting with guillotine

In order to saw mineral filled A2 composite panel properly Ø230 x 3,2 x 30 Z:24 circular panel saw is recommended for the products which have LDPE core can be saw properly with Ø230 x 3,2/2,5 x30 Z64 circular saw.

### 5.2 Grooving and Folding

Alutechbond aluminium composite panels can be shaped with simple methods. V shaped or rectangular grooves are routed on the rear of ACP using below given tools where by the aluminium cover sheet at the back side and part of the core material are retained. The small thickness of retained material then allows folding by hand.

#### 5.2.1 Grooving with portable hand saw

Portable routing machines are suitable for grooving small quantities of composite panels which require simple design. It is not suitable for massive productions and complex designs. In order to have easy processing min 800 W powered machines are recommended.

Portable routing machine

**5.2.2 Grooving with vertical saw machines**

Vertical panel saw machines are suitable for massive production which have not a complex grooving design. Cutting and grooving operations can be handled easily with rapid tool changing. It is especially suitable for 4 mm panels.

Vertical panel saw machines

In order to groove in vertical saw machines tool in the left side picture can be used. Ideal dimension for the tool : 200 x 11/2 x 30 z:12 90°

In order to cutting A2 panels in vertical saw machines tool in the left side picture can be used. Ideal dimension for the tool :230 x 3,2 x 30 z:24

In order to cutting LDPE panels in vertical saw machines tool in the left side picture can be used. Ideal dimension for the tool :230 x 3,2 /2,5

**5.2.3 Flat cutting machine**
Straight grooving with flat cutting machine is ideal for operations which is need to be done in building site.

Flat cutting machine

**5.2.4 Routing with CNC machines**
Straight grooving and angle grooving can be done in CNC machines.

CNC machines

Due to folding angle grooving tools are changed. Regular folding angles are 90° and 135° however rectangular grooving also an option according to requested design. In order to fold it clearly after grooving operation, 0,2-0,4 mm core material must be remained on backside. Rectangular groove is not suitable for mineral filled A2 class composite panels.

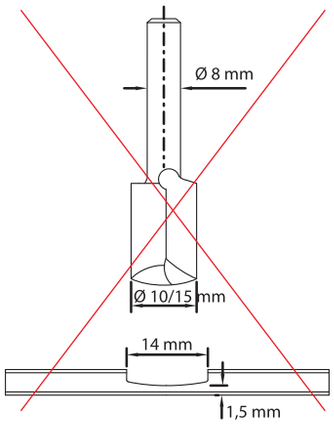


Alutechbond 100 A2 not suitable for

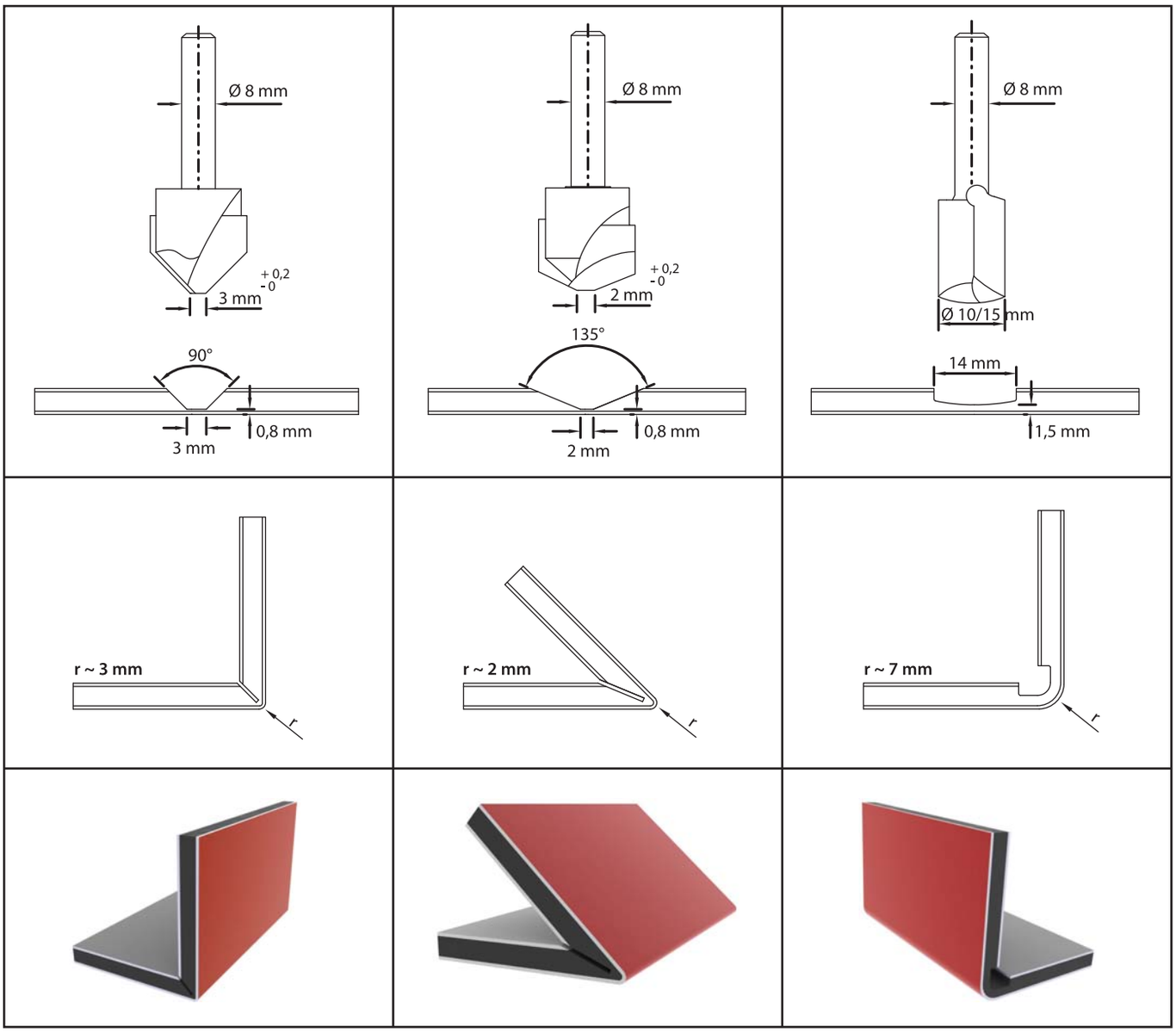


Below given picture shows that ideal dimensions of grooving for 90° folding

| | | | | |
|---|---|---|---|---|
| A (mm) | = | 4 | 5 | 6 |
| B (mm) | = | ~9.3 | ~11.3 | ~13.3 |
| C (mm) | = | ~2,7 | ~2,7 | ~2,7 |
| D (mm) | = | 0,2 | 0,2 | 0,2 |

Folding 90°

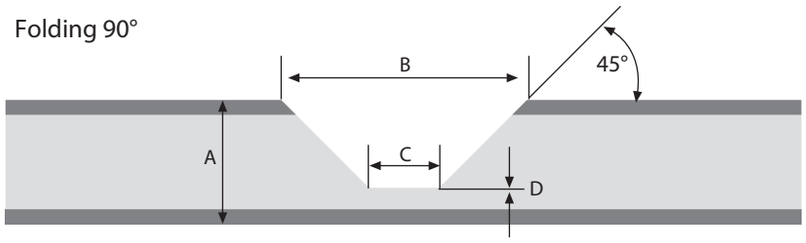

If the amount of remain core materials at bottom become below 0,2-0,4 mm, acp will be break after folding.

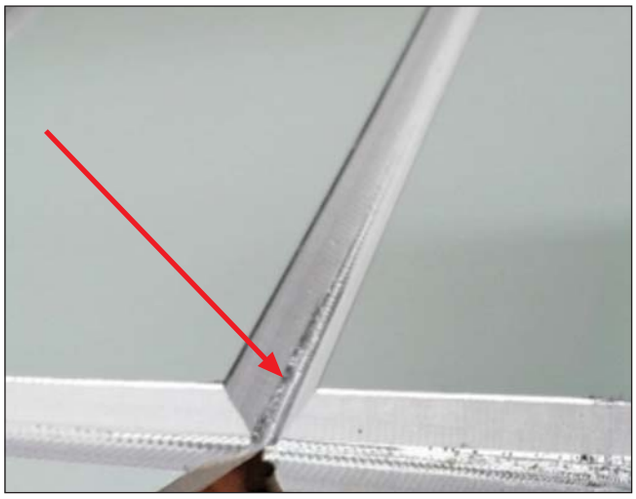

Grooving fault

The life time of grooving and cutting tools which are already used for LDPE core become very short if they used during A2 grade panels processing. In order to increase the life time of the tools, specialized tools must be used for A2 grade panels. CNC machines are recomended for grooving operation of ALUTECH 100 A2 grade panels. 10 mm diameter dia grooving tools are highly recomended for groving process. Minimum 6 mm diameter cutting tools should be used for cutting process which have carbide coating. In order to process easily, capacity of the CNC machines are prefered as 24.000 rpm. During the process rotating speed of the tools should be 12.000 rpm and moving speed of the tools can be increased maximum 5000 mm/min

Carbide cutting tools

Grooving tool for A2

**5.2.5 Folding**

After the grooving, folding can be applied by using the suitable gauge. It is important that the composite panel is processed on a flat surface. Otherwise folding won't be along the determined axis. The folding radius should be between 2-3 mm in order to prevent cracks from happening.

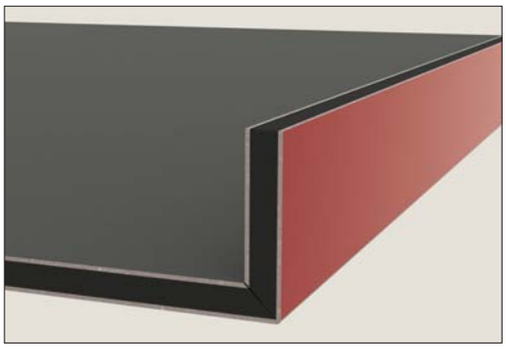

Folding

At the values below that, defects may be seen on the coating surface. During the folding process temperature play a very important role and it shouldn't be below 20 °C. By every folding, grooves lengthen 0,5 - 1 mm. That's why in order to bend the panels correctly those lenghtening measures should be taken into account. After the bending practice the correctness of angles and axes should be checked with the aid of suitable gauge. If necessary at the edges where bending process is applied, aluminium support profiles can be used. To prevent tearing and deformations on panels during grooving; groove angle, thickness and afterwards applied bending should be performed with care. For example to achieve an 90 degree angled folding 110 degree grooving can be performed. By end milling, applying the outer filling until 0,2-0,4 mm to the surface is very important for a suitable folding.

**a)** Cut V grooves according to 6.2.4 section.

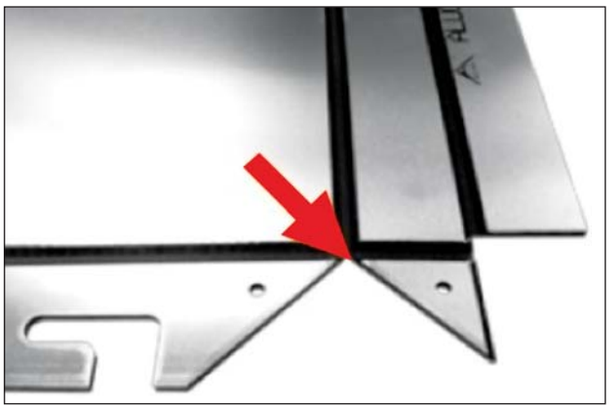

**b)** Fold the edge side more than 90°

**c)** Fold back to a little more than 90° and slightly fold triangle.

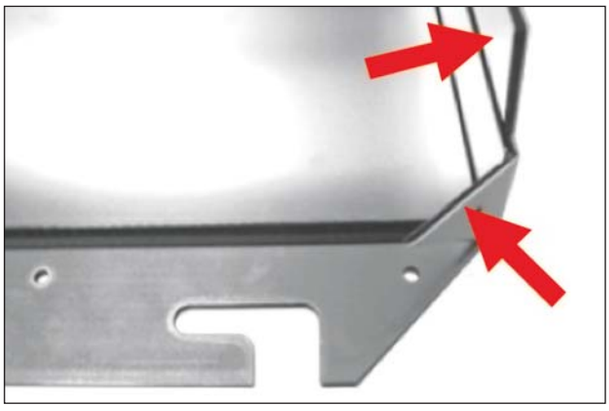

**d)** Fold the triangle together with longitudinal edge

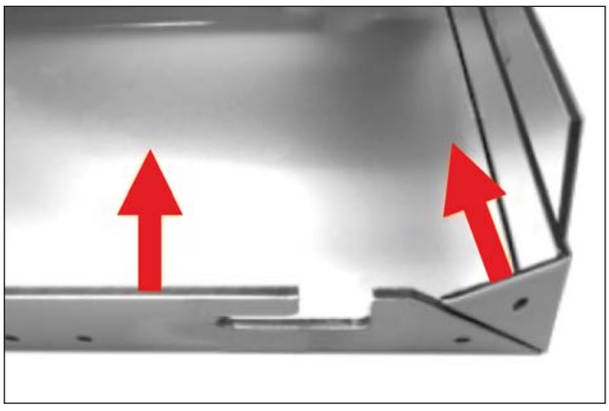

**e)** Folding the upper edges. Owing to pre stressing when folding more than 90°, the two edges of the V grooves fit tight.

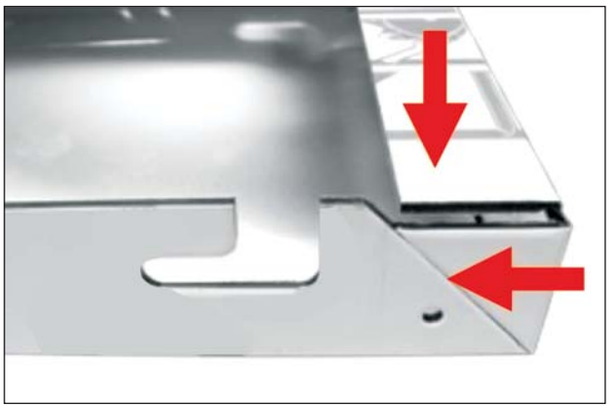

**5.3 Punching**

Notching process in composite panels is done with a punch press. Optimal space between the surface to be punched and the mold It should be detected at 0.1 mm and below. This measure can be said to be approximately 2% of the panel thickness.

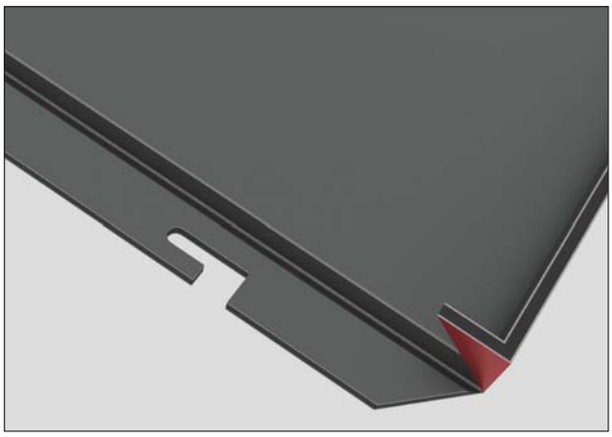

Punching

Punching

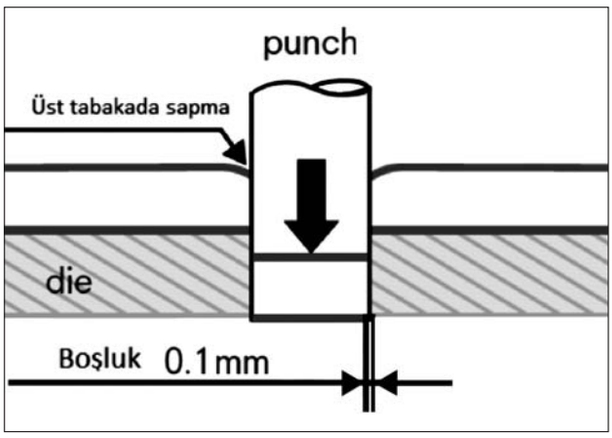


The milling can be done with Punch press. The ideal distance between the panel surface and mold has to be 0,1 mm and less. (2% of the panel thickness)

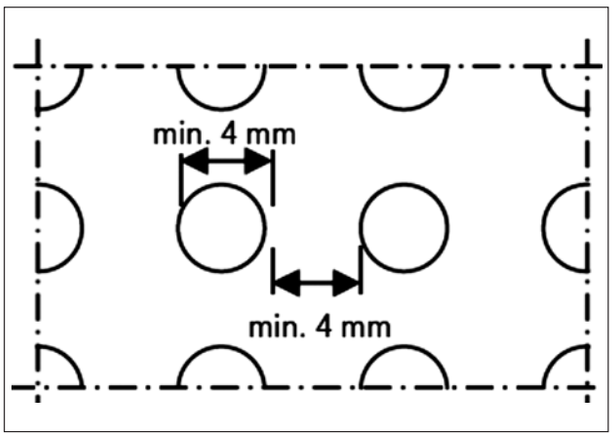


Holes of a minimum diameter of 4 mm can be punched. The minimum witdh between hole edges are also need to be 4 mm.

### 5.4 Perforation

Perforation Application

Due to wind load pressure and exposure to weathering cares needs to be taken on designing and processing. Perforation rate should be between % 35-40

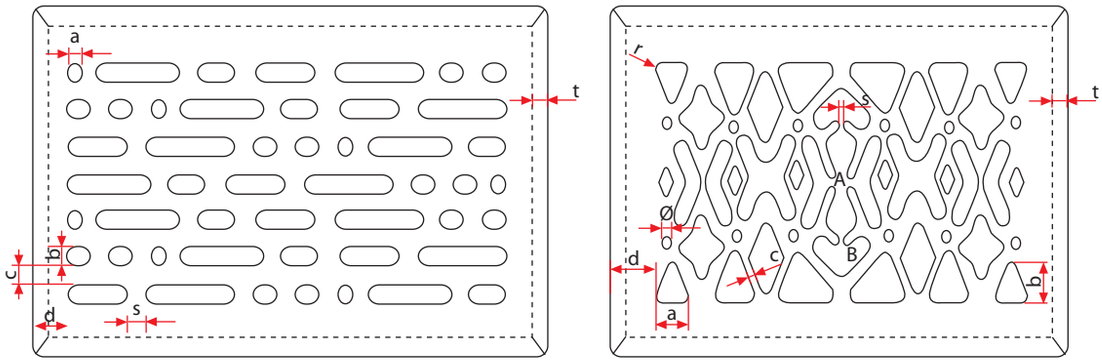


| | Processing with CNC | | | Processing with NCT | | |
|---|---|---|---|---|---|---|
| Thickness of ACP | 3 mm | 4 mm | 5 mm | 3 mm | 4 mm | 5 mm |
| Applicability | B2/B1 | | B2/B1 | B2/B1 | | B2/B1 |
| Processing limits | Ø≥ 4 mm | | | Ø≥ 4 mm | | |
| | a ≥ 4 mm | | | a ≥ 6 mm | | |
| | b ≥ 4 mm | | | b ≥ 6 mm | | |
| | c ≥ 6 mm | | | c ≥ 6 mm | | |
| | d ≥ 18 mm | | | d ≥ 25 mm | | |
| | r ≥ 2 mm | | | r ≥ 1,5 mm | | |
| | s ≥ 6 mm | | | s ≥ 6 mm | | |
| Limits of Perforation Rate | ≤ 50 % | | ≤ 40 % | ≤ 45 % | | ≤ 40 % |
| Minimum Bending Radius | ≥300 mm | | | ≥350 mm | | |

Perforated Alutechbond composite panels can be bended by roll bending machines and also these panels can be applied in curved shapes. It can be fixed using various systems such as hook on, SZ-20, frame 90 and cover strip joint systems. To combine different diameters within the same panel, or special dimensions and perforations, please consult.

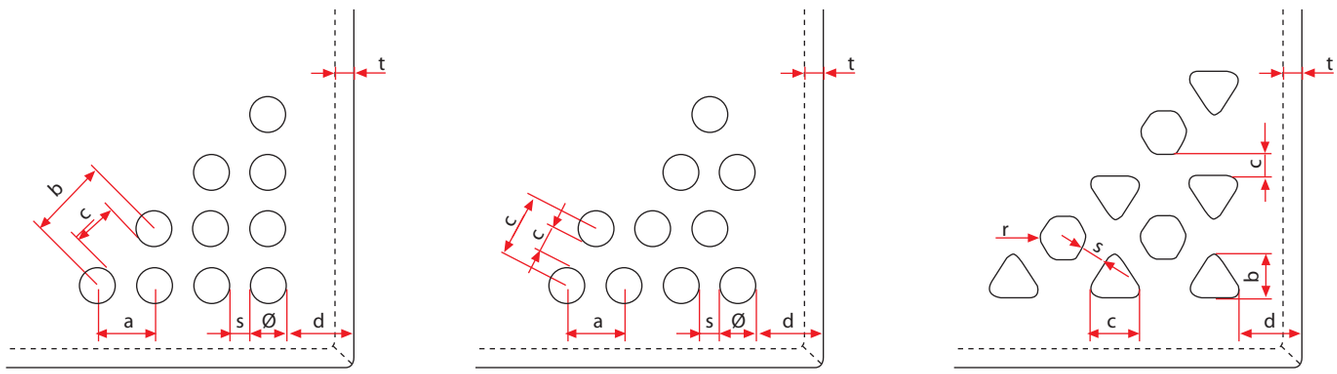


| | Processing with CNC | | | Processing with NCT | | |
|---|---|---|---|---|---|---|
| Thickness of ACP | 3 mm | 4 mm | 5 mm | 3 mm | 4 mm | 5 mm |
| Applicability | B2/B1 | | B2/B1 | B2/B1 | | B2/B1 |
| Processing limits | Ø≥ 4 mm | Ø≥ 4 mm | Ø≥ 4 mm | 60 mm ≥ Ø ≥ 4 mm | | Ø≥ 4 mm |
| | a ≥ 8 mm | a ≥ 8 mm | a ≥ 10 mm | a ≥ 8 mm | | a ≥ 10 mm |
| | b ≥ 8 mm | b ≥ 8 mm | b ≥ 10 mm | b ≥ 8 mm | | b ≥ 10 mm |
| | c ≥ 4 mm | c ≥ 4 mm | c ≥ 6 mm | c ≥ 4 mm | | c ≥ 6 mm |
| | d ≥ 12 mm | d ≥ 15 mm | d ≥ 18 mm | d ≥ 25 mm | | d ≥ 25 mm |
| | r ≥ 2 mm | r ≥ 2 mm | r ≥ 2 mm | r ≥ 1,5 mm | | r ≥ 1,5 mm |
| | s ≥ 4 mm | s ≥ 4 mm | s ≥ 6 mm | s ≥ 4 mm | | s ≥ 6 mm |
| Limits of Perforation Rate | ≤ 50 % | ≤ 45 % | ≤ 40 % | ≤ 45 % | ≤ 40 % | ≤ 40 % |
| Minimum Bending Radius | ≥200 mm | ≥250 mm | ≥300 mm | ≥200 mm | ≥250 mm | ≥300 mm |

Before starting serial mechanical process testing minimum bending radius on single acp is highly recommended.

**A2 class mineral filled aluminium composite panels are not suitable for perforation process due to slight water absorbtion of the core material.**

### 5.5 Bending

The desired values for bending process can be exerted to the composite panels. The important point before bending process is the panel thickness and the properties of composite panel filling material. If the bending process apply more than specified value, it causes metarial accumulation at the bending area. Therefore, the process should applied carefully. The bending value should be two and half times of the thickness of the composite panel.

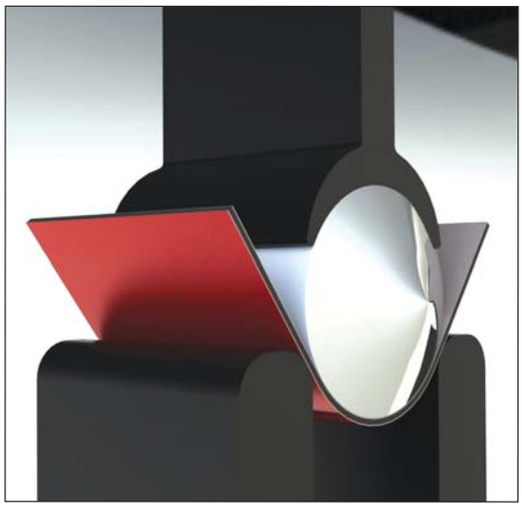

Bending

**Minimum bending radius according to ALUTECHBOND series.**

| | |
|---|---|
| ALUTECHBOND 100-200-300-400 | r=10 X d |
| ALUTECHBOND 100-200 FR B1 | r= 10 X d |
| ALUTECHBOND 100 A2 | r= 25 X d |
| ALUTECHBOND100-300 (Anodized and Mirror surfaces) | r > 200 mm |
| ALUTECHBOND 100-300 (Brushed surfaces) | r > 60 mm |

The spring back effect of aluminium composite panel which have LDPE core is more than other core type. Dimensions should be clarified and tested before serial application on sample. **There will be sparkling on bending line after bending process on both anodized and brushed surfaces.**

#### 5.5.1 Bending with roll bending machine

Alutechbond composite panels are suitable for bending process with cylinder bending machine. Make sure that feeder cylinders shouldn't be exerted too much pressure on panel during bending process. The cylinders of bending machines which are used with other materials except aluminium composite panels must be cleaned before bending aluminium composite panels in order to prevent surface from sawdust and burr etc...

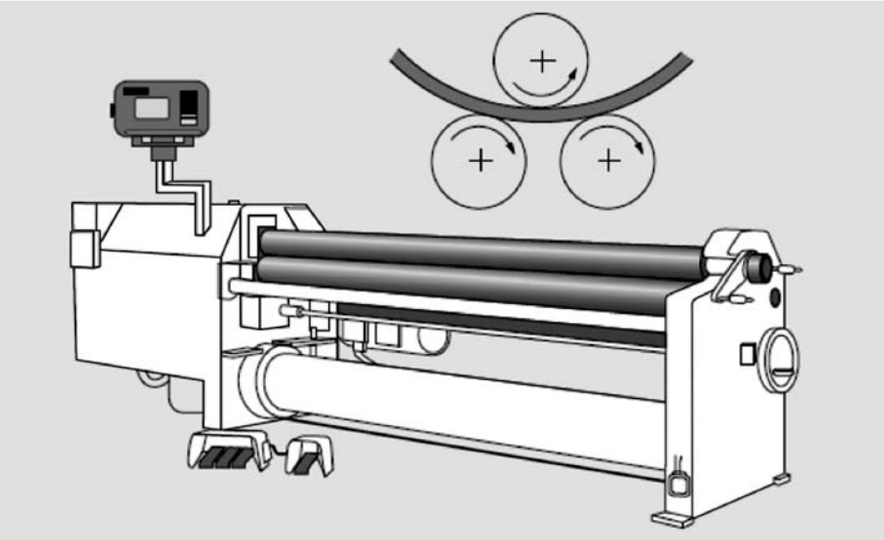

Roll Bending Machine

**5.5.1 Bending with brake press**

Alutechbond composite panels can be easily bended with brake press like metal sheets. The edge side of die which is contacted with composite must be rounded and smooth. The minimum side lenght of bent part should be 5 times of Alutechbond thickness. Bending radius is related with die gap and punch diameter. Ideal die with is calculated according to below given formula.

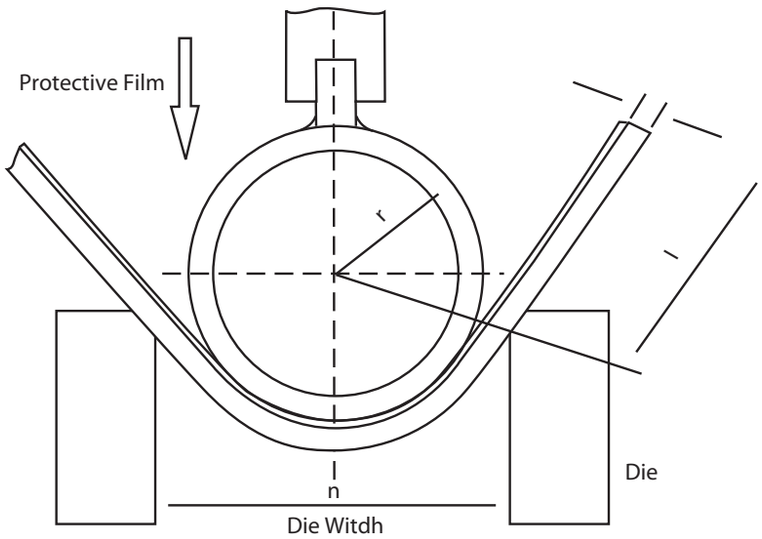


Bending with a brake press

l min : d x 5
r min: t x 15
t: Thickness of ACP (mm)
n: Ideal die width: (2 x d) + (2 x Thickness of protective film) + Diameter of punch + 15 mm

**5.5.3 Bending with folding machine**

The method of bending operation with folding machine is based on former which is stable between two cheeks and ACP is fold on the former. Bending with different radius is possible with changing the formers. The temperature of area is important with bending process and it shouldn't be under 10°C otherwise there will be a risk for paint cracking.

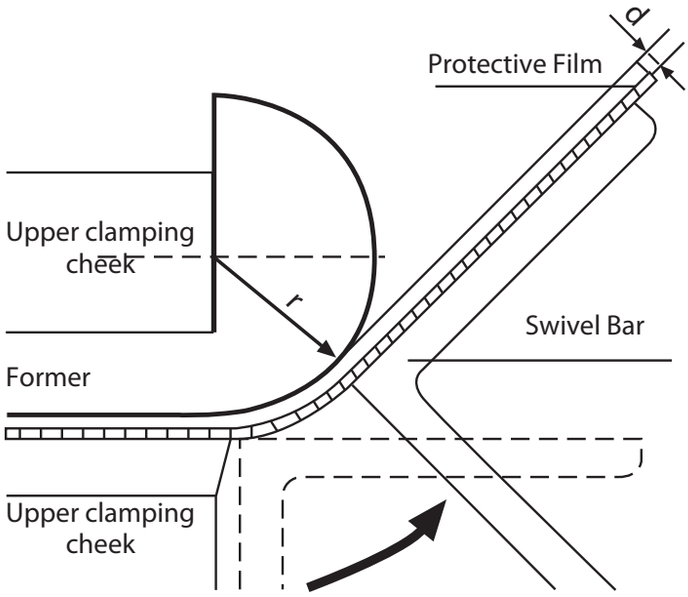


Bending with a folding machine

## 6. JOINTING AND FIXING METHODS

### 6.1 Thermal Expansion and Contraction

In order to avoid any tension occuring in the rivet and screw connections, the rivets and screws must be set tension free. The bore holes in the panels must be large enough to allow expansion.The linear thermal expansion of Alutechbond is 2,4 mm at a panel lenght of 1 meter and temperature difference of 100°.

**Thermal expansion and contraction**

| Material | Lineer Thermal Expansion Coeffcieint / °C | Elongation or shrinkage |
|---|---|---|
| Alutechbond 100 A2 | $19x10^{-6}$ | 1 mm |
| Alutechbond 100 B1 | $24x10^{-6}$ | 1,2 mm |
| Aluminium | $24x10^{-6}$ | 1,2 mm |
| Steel | $12x10^{-6}$ | 0,6 mm |
| (304) Stainless Steel | $17x10^{-6}$ | 0,9 mm |
| Concrete | $12x10^{-6}$ | 0,6 mm |
| Glass | $9x10^{-6}$ | 0,5 mm |
| Wood | $5x10^{-6}$ | 0,25 mm |
| Acrylic Sheet | $70x10^{-6}$ | 3,5 mm |

Calculation of expansion can be made with below given formula.

$$\Delta L = \alpha \times \Delta T \times L$$

$\alpha$ : Lineer Thermal Expansion Coefficient 24*10-6/°C
**Δ T** : Temperature Difference
**L** : Lenght or Height of Panel

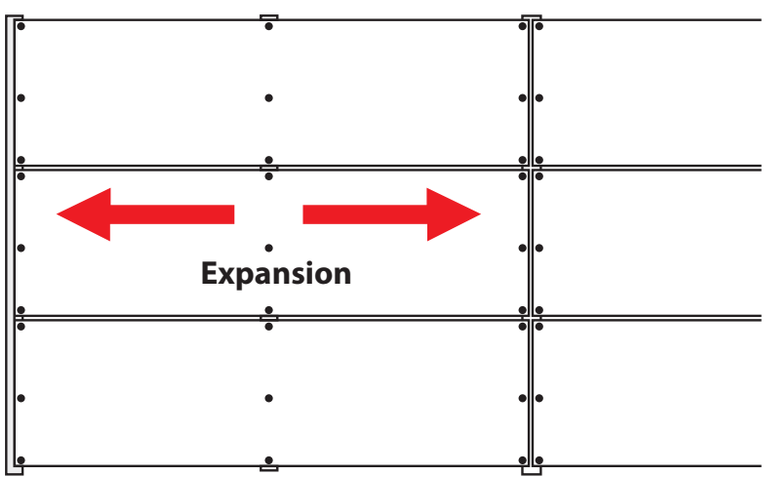


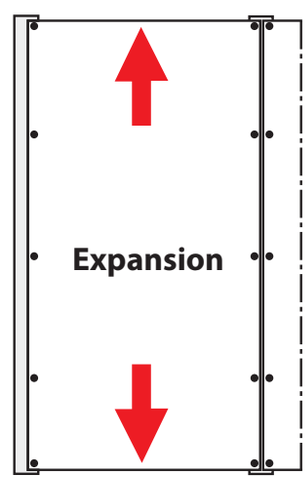


In order to clarify the situation on simple example; 1 x 3 meter black colored panels can reach approximately 70°C surface temperature under 40°C air temperature. The night temperature is accepted 20°C. Expansion on panel in mm is calculated below given formula.

$\Delta L = 24x10^{-6}$ /°C x 50°C x 3000 mm = 3,6 mm

Half of the panel expansion must be expected on the opposite panel edges.

**6.2 Drilling and Countersinking**

It is possible to make a hole by using a drill bit or punching machine. The important point is the distance of the location of the hole or punching area to the edge must be at least twice distance of the diameter of the hole.

Drilling

Alutechbond composite panels can be drilled with twist drills which is given in the picture. Countersinks are used for countersinking the hole and for widening larger holes.

Drilling tools

Countersink

**6.3 Riveting**

It is possible to rivet the composite panels to attach with other materials. The rivet might be aluminium. The resistance of the connection points depends on the area where the hole is located. The connection holes' distance to the edge should be at least twice of the diameter. If it's necessary to use screws, it must be aluminium or stainless steel.

Riveting

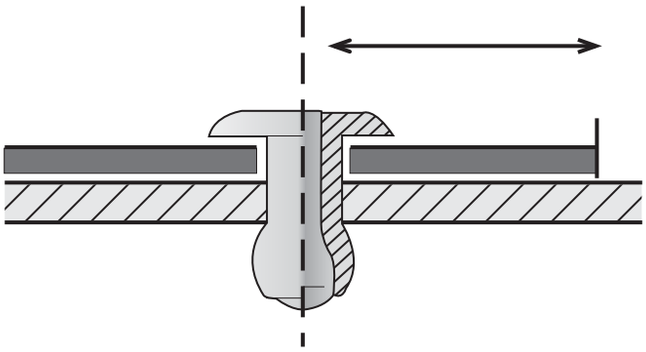

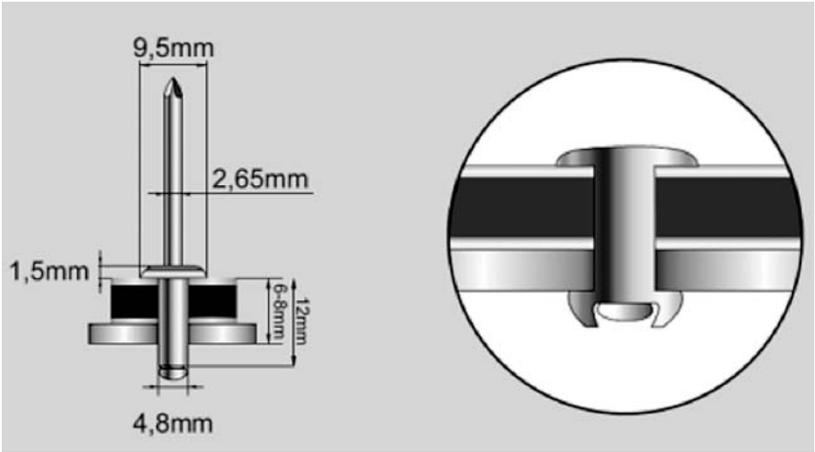


EN ISO 15977 Standard Blind Rivet

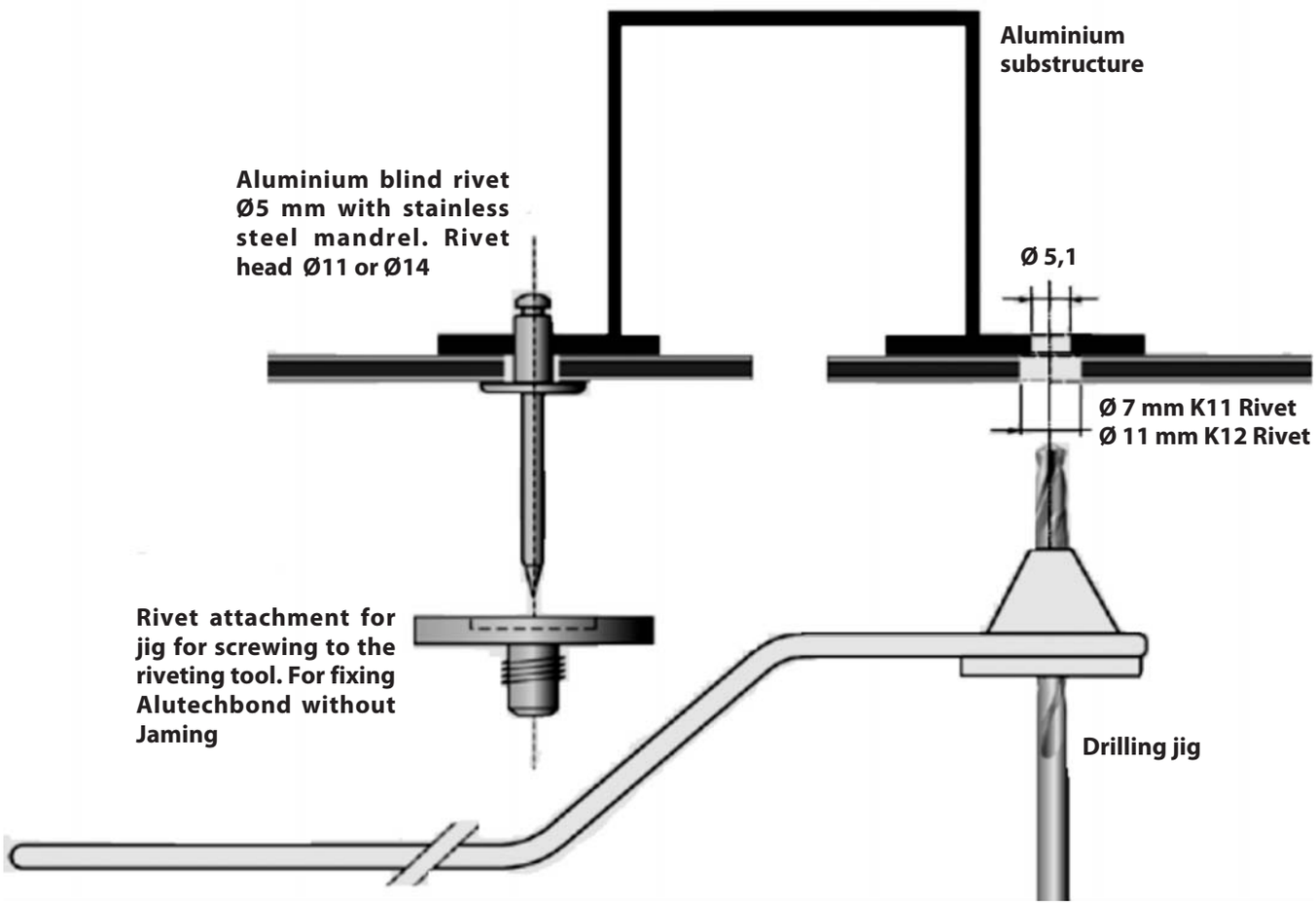


Ideal Riveting

**For outdoor use please pay attetion below given situations**

- For outdoor use, aluminium blind rivets should be used that have been approved for constructions, and have a 5 mm shaft diameter and rivet head diameter of 11 or 14 mm

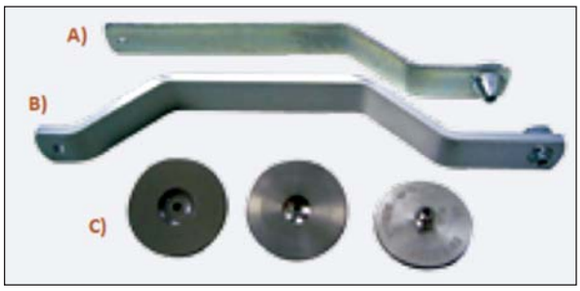


A) Conical Drilling Jig

B) Drilling Jig for hole Ø8,5 mm

C) Rivet Attachment Jigs

- Please take the thermal expansion of Alutechbond (2,4 mm/m/100°C) into account. In order to avoid jaming, the hole in the panel **must be** large enough to allow for the expected expansion.
- Drillings jigs are used for centrically drilling holes into the panel and substructure and for centrically setting the rivet.
- Rivet attachment jigs are used for setting blind rivets without jamming allowing for a tolerance 0,3 mm. During riveting many factors may have an influence on the exact tolerance of rivets. Therefore, we recommend that you make a test on a façade panel. Please always remove a protective film in the riveting area prior to riveting.

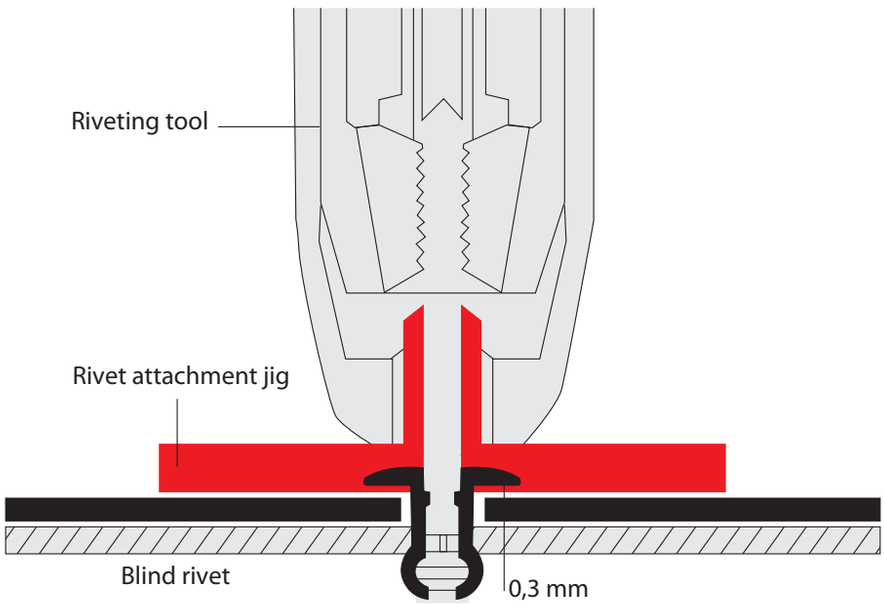


Tolerance for Riveting

Countersunk rivets are suitable indoor use only.

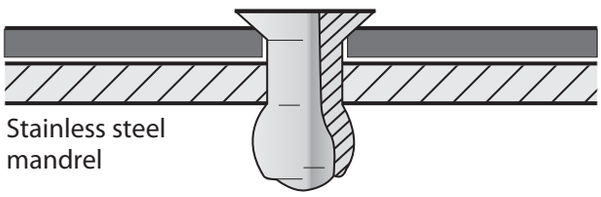


Countersunk Rivets

**6.4 Screwing**

The screws during the installation of aluminium composite panels has to be aluminium or stainless. Connection holes' distance to the edge should be at least twice of the diamater. Otherwise tears can be seen on the hole parts.

Screwing

The screws should be tightened with a torque wrench or screwdriver such that sealing washer is placed on the panel for sealing the bore hole without exerting any pressure to the panel. If the sealing washer is visibly deformed or if the rubber seal laterally protrudes beneath the washer, an expansion of the panel is no longer possible which may result in a slight deflection of the cover sheet around the sealing washer.

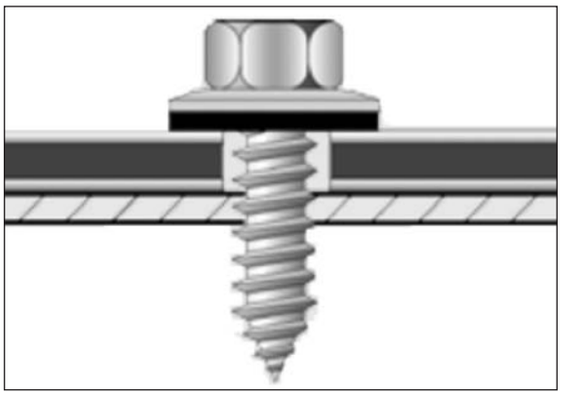

Correct setting of screws

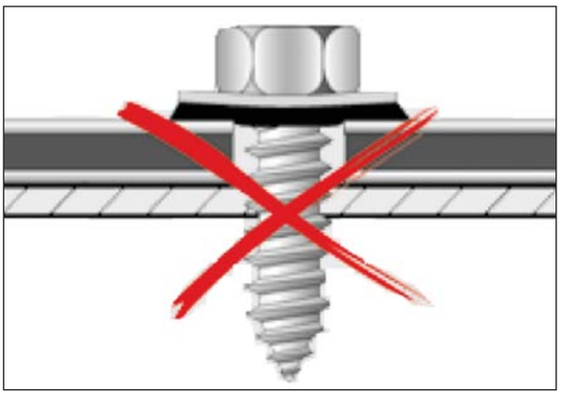

Incorrect setting of screws

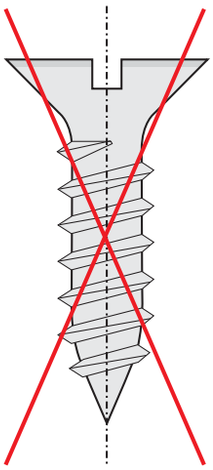

Do not use countersunk screws for outdoor application

**6.5 Sticking**

There are lots of materials avaliable to paste the composite panels. The suitable glue has to be choosen. The Glues which are not suitable for the surface may cause the oxidation and corruption on the surface in the future. it is necessary to follow the manufacturers advise during glue selection. The surface has to be cleaned, dirt, dust and waste must be removed from the environment. The pasting quality depends on the surface conditions compatibility. During the composite panels connection, the insulation should be done where necessary. The isolation elements used in such cases are expected to keep up with the necessary atmospheric conditions. Recomended sealant is neutral silicone.

Sticking

**In order to make ideal sticking below given instructions must be followed.**

- The temperature of the building components to be bonded (cladding panels, sub-frame profiles, etc.) must be at least 3 °C higher than the dew point temperature. Ambient temperature: +5 °C min. / +35 °C max. Mark precisely where the first panel must be bonded on the substructure or use a reference which is fixed on the substructure.

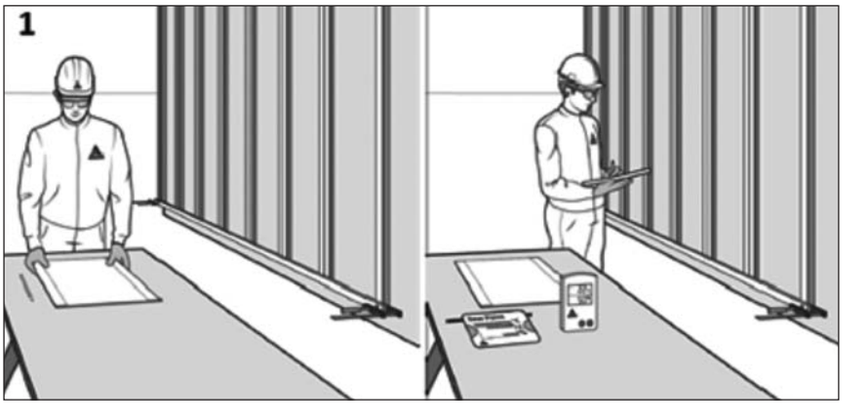


- The surface to be bonded must be clean, dry and free from grease. Abrading with an abrasive pad (e.g. Scotch Brite very fine) or mechanical grinding of the surfaces to be bonded with a very fine grinder, (grain 80).

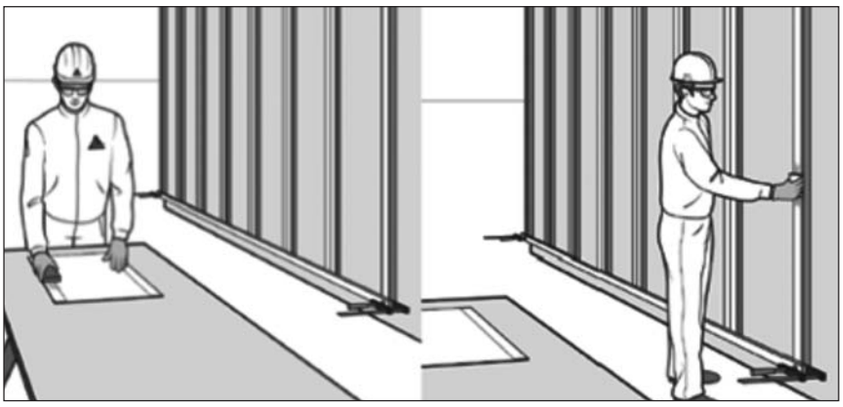

- Remove dust with a lint-free paper towel or cleaning paper.

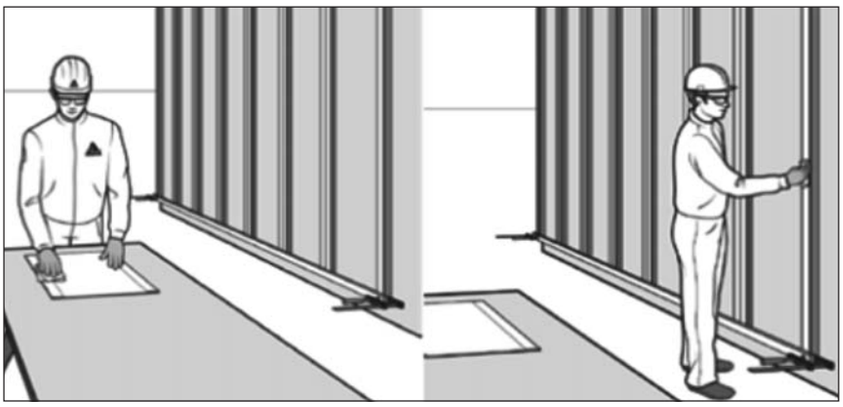

- Activate the bond face with Sika® Aktivator-205 (or other if required). Use a clean lint-free paper towel or cleaning paper and wipe in one direction only (dirty cloths must be replaced). Allow a flash off time of 10 minutes.

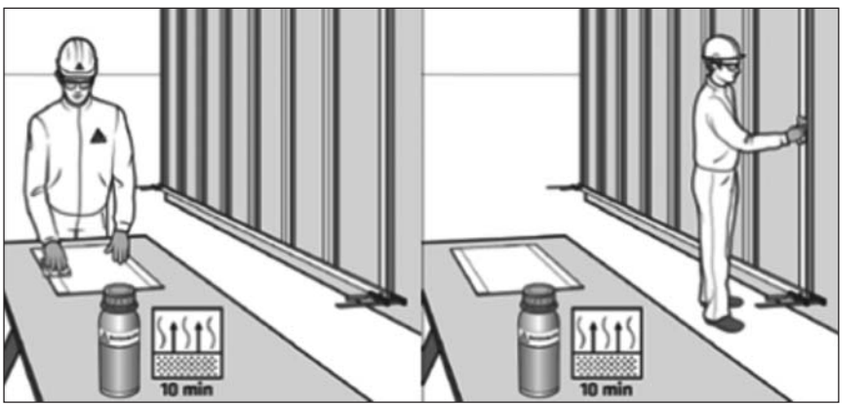


- Shake SikaTack® Panel Primer or Sika® Primer-210 thoroughly (the movement of the steel balls in the container must be clearly audible). Apply one thin coat of SikaTack® Panel Primer or Sika® Primer-210 uniformly over the whole surface with a felt pad.  Allow a flash off time of at least 30 minutes

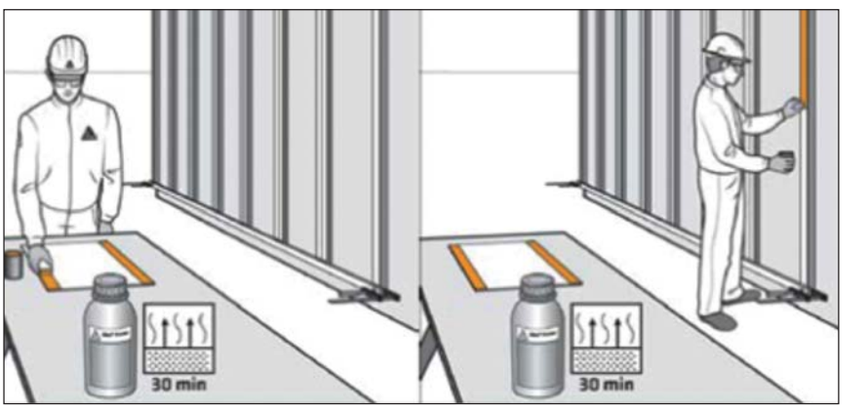

- Apply SikaTack Panel Fixing Tape over the whole length of the vertical sections and parallel to the edges. Do not pull off the protective foil at this time.

- Apply the chosen SikaTack® Panel adhesive in a triangular bead by using the triangular nozzle supplied with at least 5 mm gap to the fixing tape and to the side of the sub-frame profile.

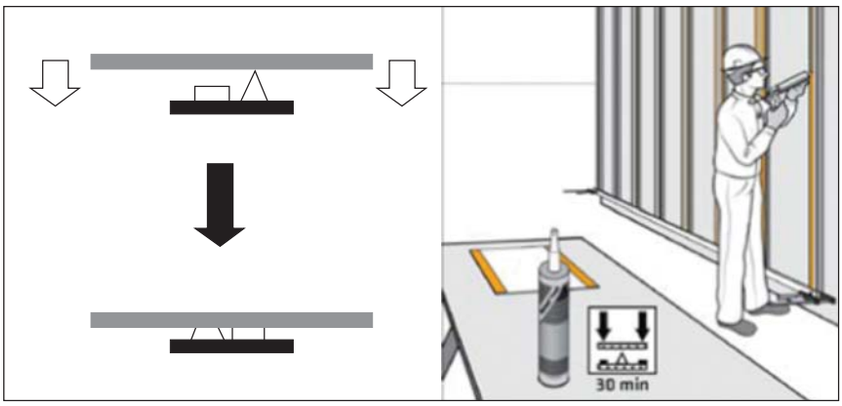


- Remove the protective foil on the SikaTack® Panel Fixing Tape. Place the cladding panel in the required position first, without the panel touching the fixing tape. After, press them firmly until they contact the SikaTack Panel Fixing Tape.

- Positioning block must be used for serial sticking operations

Positioning for sticking

- In order to stick different layers correctly, adhesive must be apply to surface smoothly and homogeneously. If adhesive collect some areas on the surface, there will be some undesired marks on the surface after pressing.

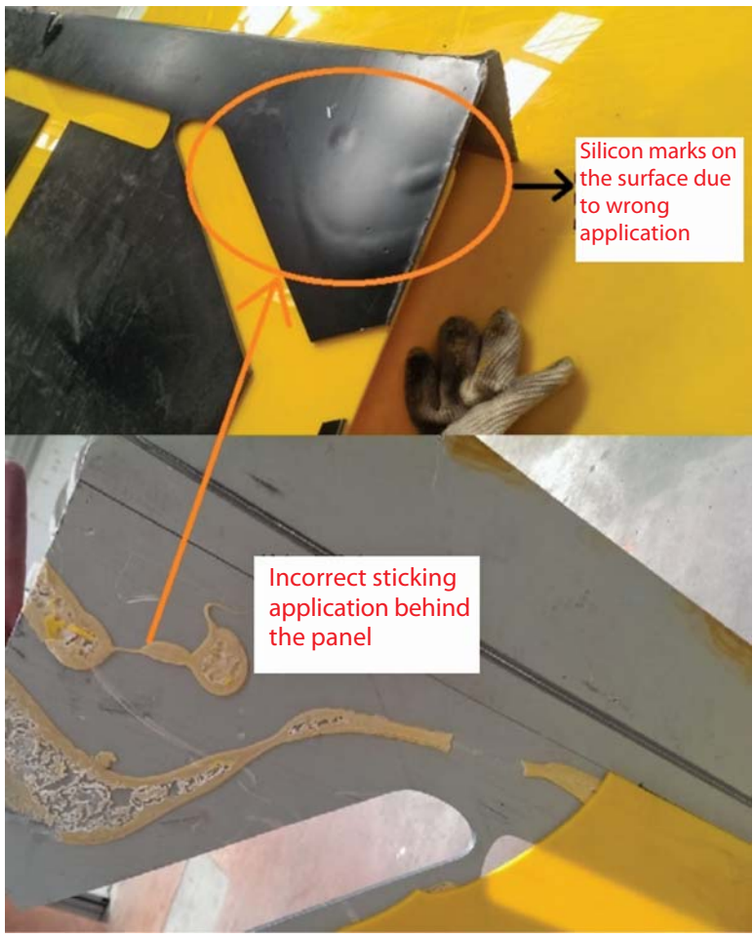


Incorrect sticking

## 7. ASSEMBLING METHODS

Alutechbond Aluminium Composite Panels are used on the facades of the buildings. There are many advantages. Alutechbond Aluminium Composite Panels provides sound and thermal isolation, easy and fast installation, flexible designs, light weight, and economical costs, which makes it highly prefered. It is lighter and provides beter insulation than the solid sheets with same thickness. Alutechbond can be installed as casettes. According to Application sizes, wind load and static calculations must be made. If necessary panels must be supported by profiles. If there is no bulwark on the facade where Alutechbond Composite Panel is going to be installed, its better to insulate that area for the heat isolation of the building. Frame formed special Spandrel Panels should be used (produced from galvanized sheet and rockwool)

## 7.1 Application with Notchnig

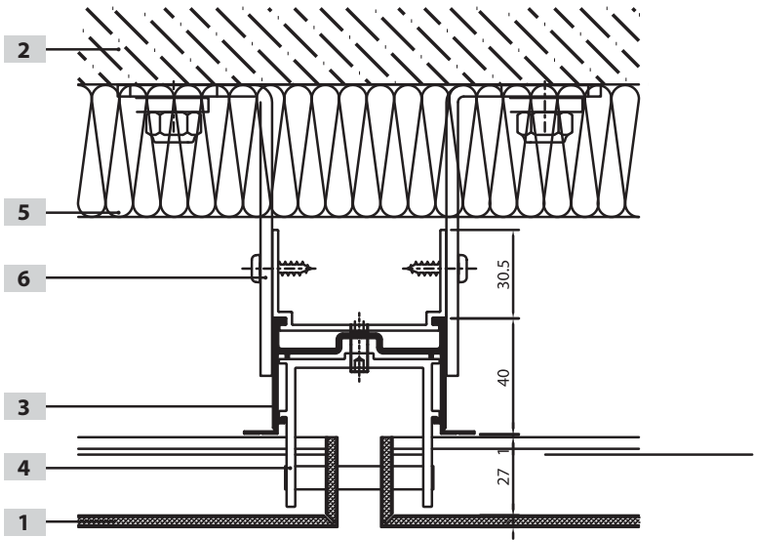


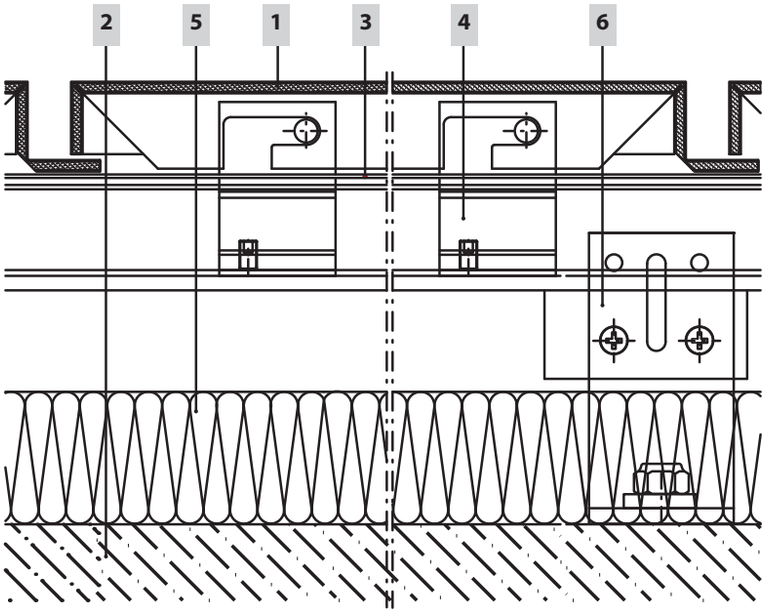


| ALUTECH CARRIER SYSTEM MATERIALS | |
|---|---|
| **NO** | **DESCRIPTION** |
| 1 | ALUTECHBOND COMPOSITE PANEL |
| 2 | CONCRETE WALL |
| 3 | VERTICAL CARRIER PROFILE |
| 4 | FIXING PROFILE |
| 5 | ROCKWOOL |
| 6 | GALVANIZED ANCHOR |

## 7.2 Clipping Application

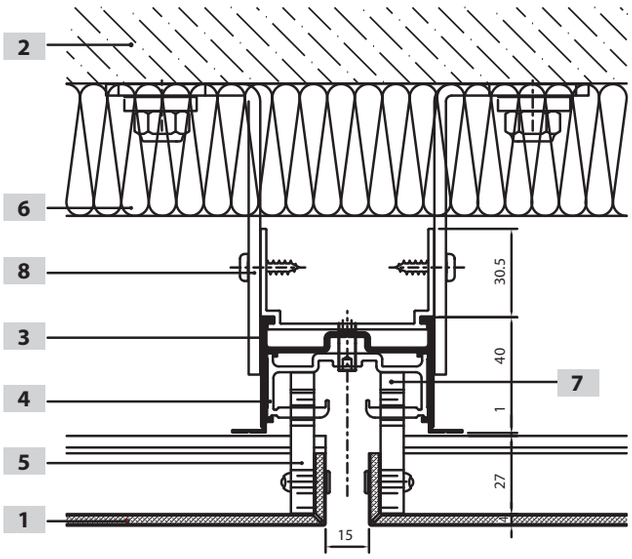


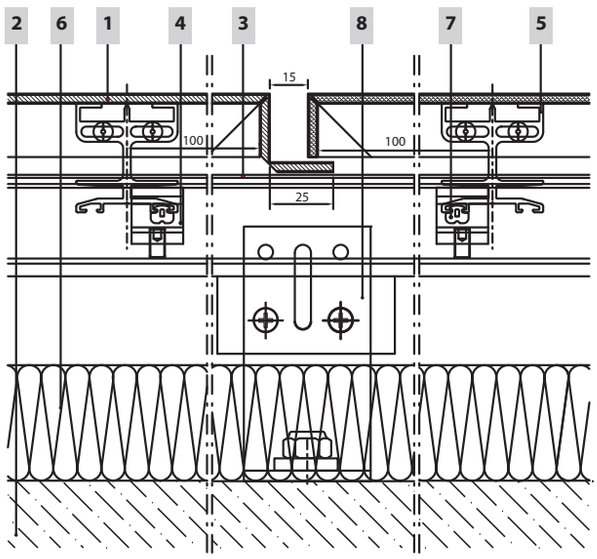


| ALUTECH CARRIER SYSTEM MATERIALS | | | |
|---|---|---|---|
| NO | DESCRIPTION | NO | DESCRIPTION |
| 1 | ALUTECHBOD COMPOSITE PANEL | 5 | CONNECTION PROFILE |
| 2 | CONCRETE WALL | 6 | ROCKWOOL |
| 3 | VERTICAL CARRIER PROFILE | 7 | EPDM GASKET |
| 4 | FIXING PROFILE | 8 | GALVANIZED ANCHOR |

## 7.3 Application with Joint Strip

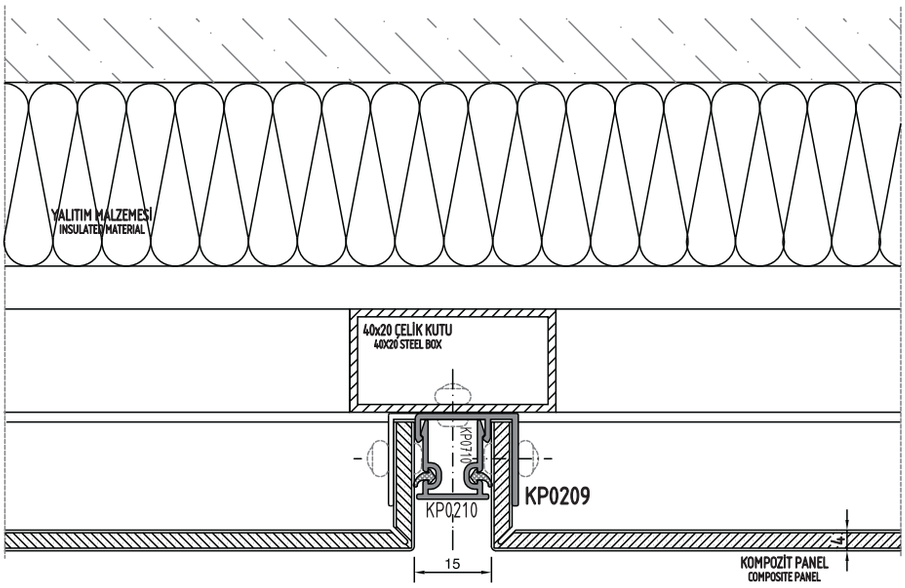


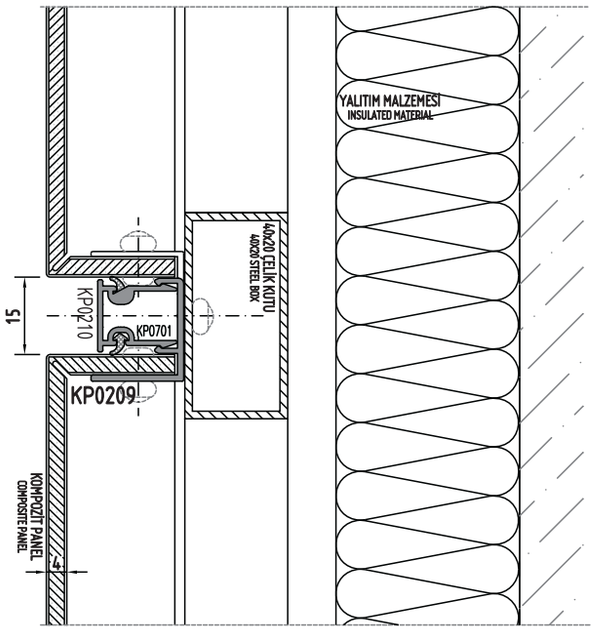


## 7.4 Application with H Profile

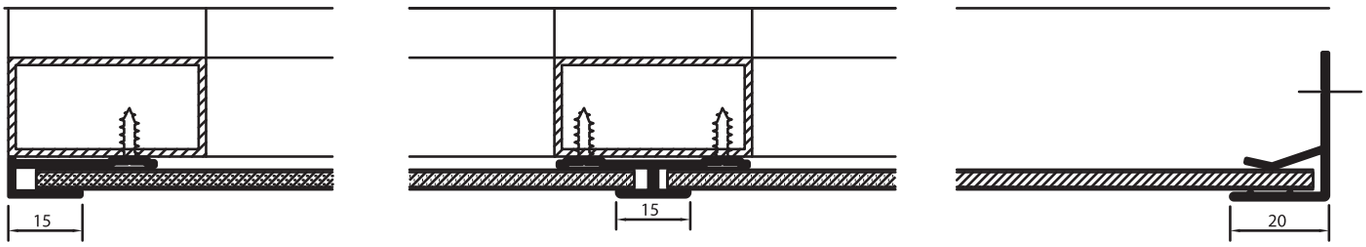

## 8. WATER PROOFING

There are two types of application methods. You can find details below; Application methods will be choosen accordingly to where the visual and functional requirements.

### 8.1 Open Grooved Solutions

On the Composite Panel applications water transfer and stratification made by the composite panel bending form and the profiles used on the connection points. This system provides air circulation inside. The drops are dried with this circulation.

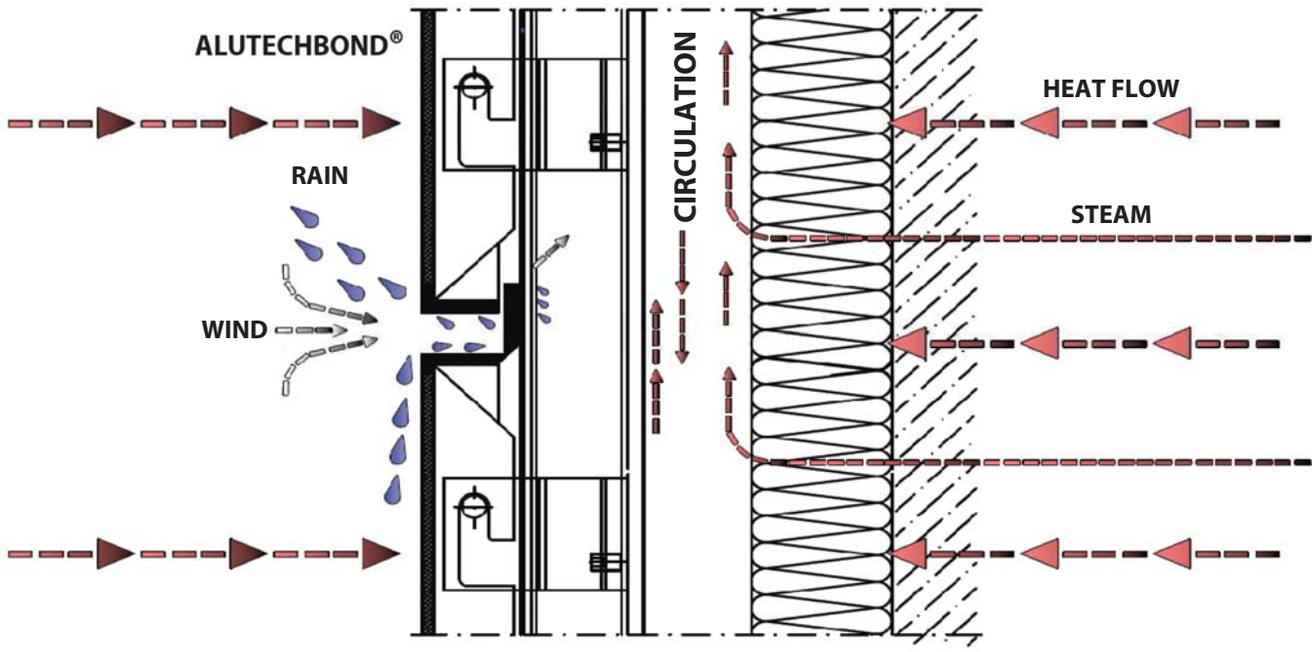


### 8.2 Silicon Filled Solutions

Water insulation is performed by filling all the gaps with silicone which is visible from outside. The silicon must be suitable for environmental conditions.

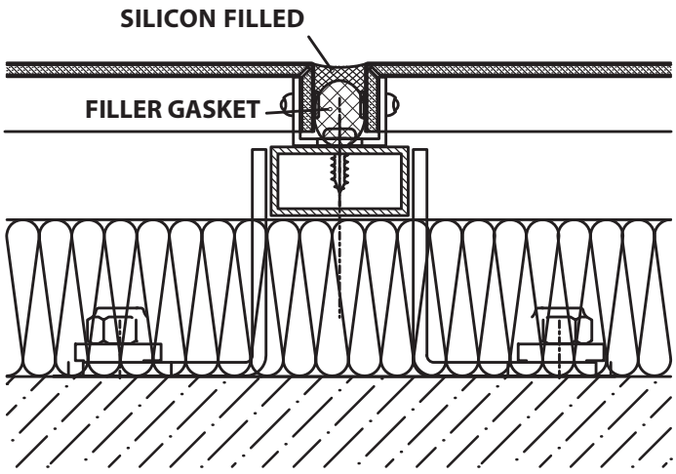

## 9. WIND LOAD AND STRES

Due to weather condition wind load pressure and stres on the panel must be calculated before application. During the calculation below given criteria's must be considered.

- Wind load
- Panel Thickness
- Coil Thickness & Safety Tension
- Sub Construction
- Panel Dimensions

During the project first of all wind load has to be calculated. If not calculated properly there might be some damages on the sub construction.

Composite panels are applicated on aluminium or steel sub-construction. Therefore it is not only the panel which is exposed to wind load. The sub-construction on which the panels have been applicated will be exposed as well. During the statical calculation of sub-construction allowed maximum stres should not be exceeded.

**WIND LOAD RESISTANCE VALUE**

c .q=W (Wind Load)
W=Wind Load
C=Coefficient
q=Absorbtion q: $v^2$ / 16 v: Wind velocity (m/sn)
Height of building / Witdh of building < 5 C:1,2 ( Common buildings)
Height of building / Witdh of building < 5 C:1,6 ( Tower buildings)

| Wind Speed and Suction Depending on Elevation | | | The Distribution of Wind Load on The Affected Surface of The Building W = c.q | | |
|---|---|---|---|---|---|
| Height from the ground (m) | Wind velocity (v) (m/s) | Absorbtion (q) kN/m² | Height from the ground (m) | Common buildings | Tower buildings |
| 0m - 8m | 28 | 0,5 | 0m - 8m | 0,60kN/m² | 0,80kN/m² |
| 9m - 20m | 36 | 0,8 | 9m - 20m | 0,96kN/m² | 1,28kN/m² |
| 21m - 100m | 42 | 1,1 | 21m - 100m | 1,32kN/m² | 1,76kN/m² |
| >100m | 46 | 1,3 | >100m | 1,56kN/m² | 2,08kN/m² |

* Wind loads should be applied according to TS 498. Wind load calculation depends on the geometry of the structure.
* Wind loads depend on the table calculated according to the unit area of to the building.

**STRESS CALCULATION FORMULA**

Stres : B . W . $B^2$ / $t^2$
B : Lenght of panel / Coefficient for panel witdh
W : Wind pressure
$b^2$ : The lenght of short side of panel
$t^2$ : (Thickness of panel$^3$ - Thicknes of core material $^3$) / Thickness of panel

| Thickness of panel | $t^2$ (mm²) | %0,2 Proof stress (N/mm²) | |
|---|---|---|---|
| 2 | 3,5 mm² | 119 | **Result of this calculation should be below 119 N/mm². Otherwise plastic deformation is occured.** |
| 3 | 6,33 | 119 | |
| 4 | 9,25 | 119 | |
| 5 | 12,2 | 119 | |
| 6 | 15,16 | 119 | |

## 1 SUPPORTED ON 2 EDGES

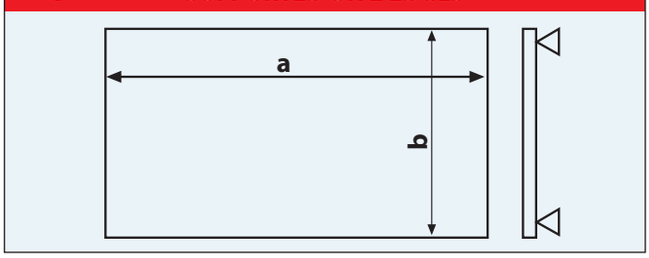


**1-** Stress = $(0,75).w.b^2 / t^2$

## 2 FIXED ON 2 EDGES

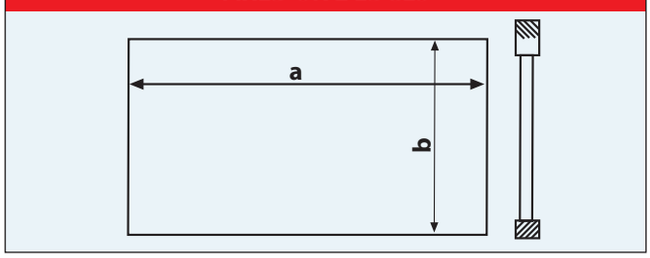


**2-** Stress = $(0,50).w.b^2 / t^2$

## 3 SUPPORTED ON 4 EDGES

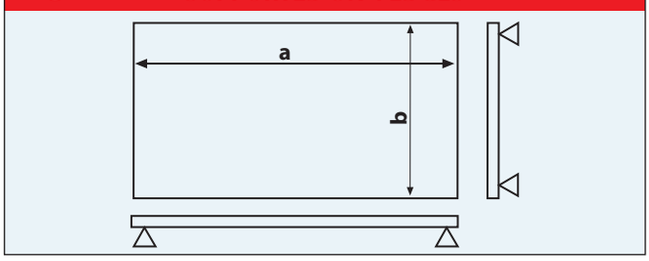


**3-** Stress = $B.w.b^2 / t^2$

| a/b | 1 | 1.2 | 1.4 | 1.6 | 1.8 | 2.0 | >3.0 |
|---|---|---|---|---|---|---|---|
| B | 0,287 | 0,376 | 0,453 | 0,517 | 0,569 | 0,61 | 0,713 |

**Maximum Stress (N/mm²)**

| Thickness of panel | Panel witdh (mm) | Lenght of Panel (mm) | | | | | | | | |
|---|---|---|---|---|---|---|---|---|---|---|
| | | 900 | 1157 | 1200 | 1500 | 1800 | 2100 | 2400 | 2700 | >3000 |
| 0,5 (51) | 600 | 10 | 12 | 12 | 14 | 14 | 14 | 14 | 14 | 14 |
| | 900 | 13 | 16 | 20 | 23 | 27 | 27 | 31 | 31 | 31 |
| | 977 | 13 | 19 | 19 | 27 | 29 | 31 | 31 | 37 | 37 |
| | 1200 | 20 | 21 | 22 | 29 | 40 | 44 | 47 | 47 | 56 |
| | 1500 | 23 | 27 | 29 | 35 | 46 | 55 | 63 | 69 | 74 |
| 1 (102) | 600 | 18 | 24 | 24 | 26 | 28 | 29 | 29 | 29 | 29 |
| | 900 | 25 | 33 | 34 | 47 | 53 | 56 | 59 | 62 | 66 |
| | 977 | 25 | 39 | 39 | 53 | 59 | 63 | 63 | 74 | 74 |
| | 1200 | 40 | 42 | 45 | 62 | 76 | 87 | 95 | 99 | 103 |
| | 1500 | 45 | 54 | 62 | 70 | 92 | 110 | 126* | 138* | 148* |
| 1,5 (153) | 600 | 28 | 36 | 36 | 39 | 42 | 44 | 44 | 44 | 44 |
| | 900 | 38 | 49 | 56 | 70 | 80 | 85 | 86 | 94 | 99 |
| | 977 | 38 | 58 | 58 | 80 | 88 | 94 | 94 | 110 | 110 |
| | 1200 | 56 | 62 | 67 | 92 | 113 | 130* | 142* | 149* | 155* |
| | 1500 | 70 | 82 | 92 | 105 | 137* | 165* | 189* | 208* | 223* |
| 2 (204) | 600 | 38 | 47 | 47 | 52 | 56 | 58 | 58 | 58 | 58 |
| | 900 | 50 | 66 | 75 | 94 | 107 | 113 | 119* | 125* | 131* |
| | 977 | 50 | 78 | 78 | 107 | 117 | 126* | 126* | 147* | 147* |
| | 1200 | 75 | 83 | 89 | 123* | 151* | 173* | 190* | 198* | 206* |
| | 1500 | 94 | 109 | 123* | 140* | 183* | 220* | 252* | 277* | 297* |
| 2,5 (255) | 600 | 47 | 59 | 59 | 64 | 69 | 73 | 73 | 73 | 73 |
| | 900 | 63 | 82 | 93 | 117 | 134 | 141* | 149* | 156* | 164* |
| | 977 | 63 | 97 | 97 | 133* | 147* | 157* | 157* | 184* | 184* |
| | 1200 | 93 | 104 | 112 | 154* | 189* | 216* | 237* | 248* | 258* |
| | 1500 | 117 | 136 | 154* | 175* | 229* | 275* | 315* | 346* | 371* |

*** marked panels must be supported**

## 4 FIXED ON 4 EDGES

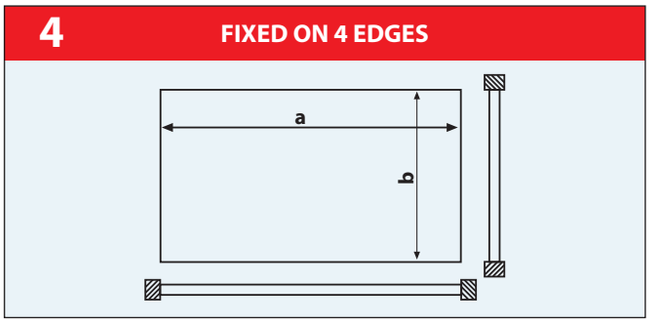


**4-** Stress = $B.w.b^2 / t^2$

| a/b | 1 | 1.2 | 1.4 | 1.6 | 1.8 | 2.0 | >3.0 |
|---|---|---|---|---|---|---|---|
| B | 0,308 | 0,383 | 0,4356 | 0,4680 | 0,487 | 0,497 | 0,5000 |

**Maximum Stres ($N/mm^2$)**

| Thickness of panel | Panel witdh (mm) | Lenght of Panel (mm) | | | | | | | | |
|---|---|---|---|---|---|---|---|---|---|---|
| | | 900 | 1157 | 1200 | 1500 | 1800 | 2100 | 2400 | 2700 | >3000 |
| 0,5 (51) | 600 | 8 | 9 | 10 | 10 | 10 | 10 | 10 | 10 | 10 |
| | 900 | 13 | 17 | 19 | 20 | 22 | 22 | 22 | 22 | 22 |
| | 977 | 13 | 20 | 20 | 24 | 25 | 25 | 25 | 25 | 25 |
| | 1200 | 19 | 22 | 23 | 30 | 36 | 38 | 39 | 39 | 39 |
| | 1500 | 20 | 22 | 30 | 37 | 47 | 53 | 57 | 59 | 61 |
| 1 (102) | 600 | 18 | 19 | 19 | 19 | 19 | 19 | 19 | 19 | 19 |
| | 900 | 27 | 34 | 37 | 42 | 44 | 44 | 44 | 44 | 44 |
| | 977 | 27 | 40 | 40 | 48 | 50 | 51 | 51 | 51 | 51 |
| | 1200 | 37 | 45 | 48 | 62 | 70 | 75 | 77 | 78 | 78 |
| | 1500 | 42 | 48 | 62 | 75 | 93 | 106 | 114 | 119* | 121* |
| 1,5 (153) | 600 | 26 | 29 | 29 | 29 | 29 | 29 | 29 | 29 | 29 |
| | 900 | 40 | 50 | 55 | 62 | 65 | 66 | 66 | 66 | 66 |
| | 977 | 40 | 59 | 59 | 72 | 75 | 77 | 77 | 77 | 77 |
| | 1200 | 55 | 67 | 72 | 93 | 106 | 113 | 116 | 117 | 117 |
| | 1500 | 62 | 72 | 93 | 112 | 140* | 159* | 171* | 178* | 181* |
| 2 (204) | 600 | 35 | 38 | 39 | 39 | 39 | 39 | 39 | 39 | 39 |
| | 900 | 54 | 67 | 73 | 83 | 87 | 88 | 88 | 88 | 88 |
| | 977 | 54 | 79 | 79 | 97 | 101 | 103 | 103 | 103 | 103 |
| | 1200 | 73 | 89 | 96 | 123* | 141* | 150* | 155* | 156* | 156* |
| | 1500 | 83 | 96 | 123* | 150* | 187* | 212* | 228* | 237* | 242* |
| 2,5 (255) | 600 | 44 | 48 | 48 | 49 | 49 | 49 | 49 | 49 | 49 |
| | 900 | 67 | 84 | 91 | 104 | 109 | 109 | 109 | 109 | 109 |
| | 977 | 67 | 99 | 99 | 121* | 126* | 126* | 126* | 126* | 126* |
| | 1200 | 91 | 111 | 120* | 154* | 176* | 188* | 194* | 195* | 195* |
| | 1500 | 104 | 120* | 154* | 187* | 233* | 265* | 285* | 296* | 302* |

*** marked panels must be supported**

| | |
|---|---|
| **MATERIAL OF FRAME** | |
| **Material of profile** | Box profile with steel. |
| **Dimensions** | 30 mm x 40 mm x 2 mm ( Witdh x Lenght x Thickness) |
| **Horizontal lenght** | 1021 mm |
| **Vertical lenght** | 1202 mm |
| **Connection** | Horizontal and vertical box profiles are connected each other with welding. |
| **FIXING** | |
| **Frame** | S235 Galvanized Stainless Steel Profile |
| **Connection Equipment** | SAE 304 Stainless Steel |
| **Fixing detail** | Composite panels are fixed on frame with 3,9 x 19 mm countersunk galvanized screw and 2 mm x 20 mm steel bracket on 8 different points. |
| **Aluminium Bracket** | EN AW 6063-T6 / ( 20 MM X 20 MM X 2 MM ) |
| **COMPOSITE PANEL** | |
| **Alloy** | EN AW 3005 / H 12 |
| **Modulus of elasticity** | 70 GPA |
| **Yield strenght** | 140 - 195 MPA ( TS EN 485-2) |
| **Tensile strenght** | 103 MPA |
| **ISOLATIONS** | |
| **Horizontal / Vertical** | Along the axis of connection between panel and frame is isolated with neutral silicon Wacker Cs |

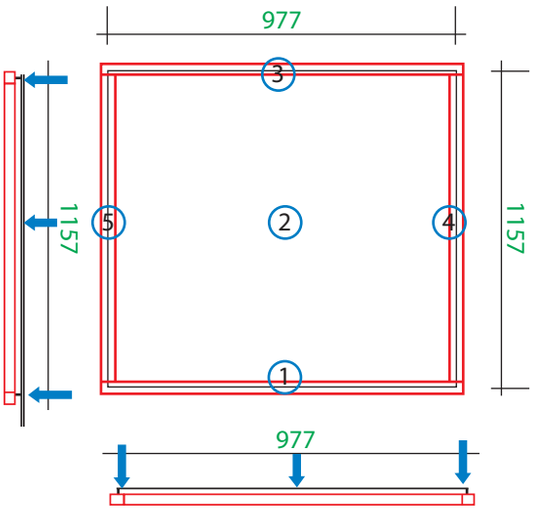


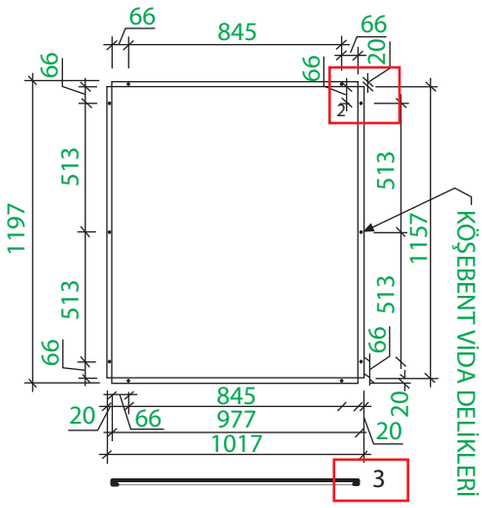


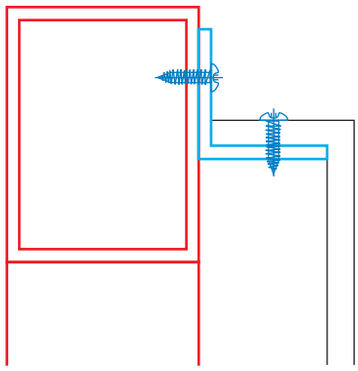

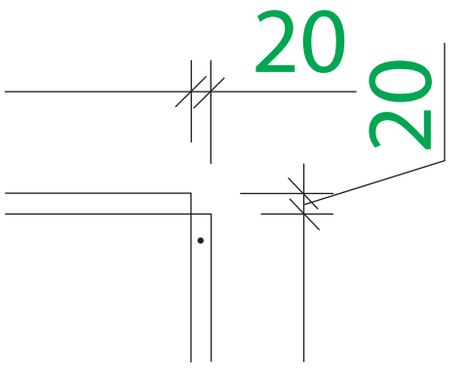

## 10. PACKAGING TRANSPORTING AND STORING

Composite Panels should be kept in well vantilated, dry and clean areas. To prevent damages of the paint on the surface should be used plastic brackets and cardboards. Ideal storage period is 6 months. 50 - 100 plates on one pallet. Panels with same size should packaged together. To have a clean and smooth surface on the panels they should be kept clean. Stacking should be made horizontally. Vertical stacking causes flatness problem on lenght axis. Store the pallets stacked one over the other with a maximum 6 pallets of the same format stacked on top of each other (heavy pallets at the bottom

| PALET COMPONENTS | | | |
|---|---|---|---|
| **No** | **DESCRIPTION** | **Dimensions** | **Quantity** |
| 1 | WOOD WEDGE | 50 x 100 x 3200 mm | 4 piece |
| 2 | WOOD WEDGE | 70 x 70 x 1250 mm | 5 piece |
| 3 | WOOD WEDGE | 20 x 100 x 3200 mm | 3 piece |
| 4 | CARDBOARD | 1250 x 3200 x 4 mm | 2 piece |
| 5 | PLASTIC BRACKET | 50 x 80 x 4 mm | 6 piece |
| 6 | POLY BAND | 15 x 1 mm | 3 piece |

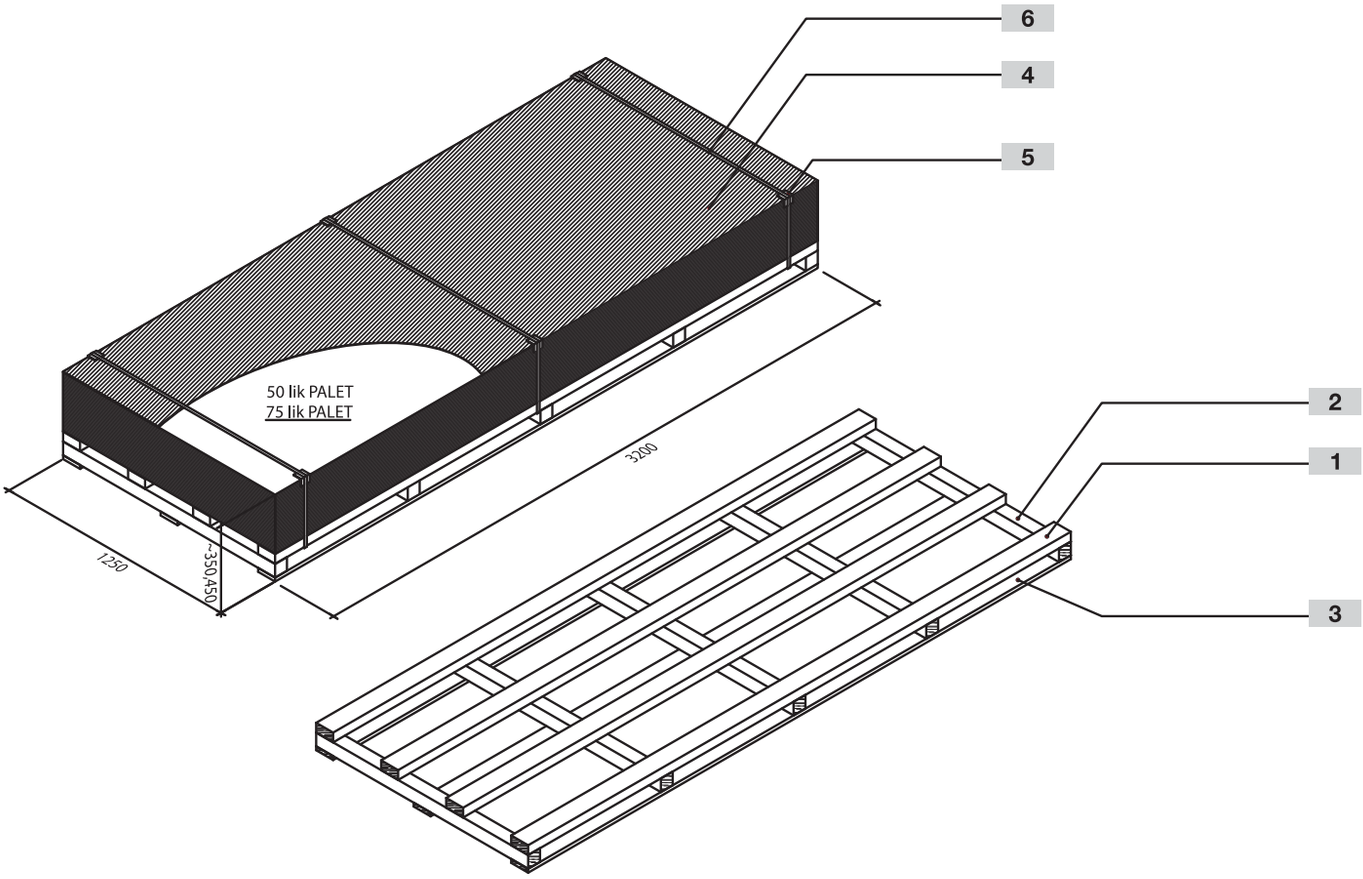


**A2 class mineral filled aluminium composite panels must be stored in dry places due to water permeable of core material. If the sheets exposed to wet condition more than 24 hours, water penetrate inside the core material then the product warranty will not be applicable.**

**If the sheets are exposed to a temperature more than 90°C for 1 hour then the product warranty will not be applicable.**

. In order to carry pallets with forklift without problem, below given three issues should be pay attention.

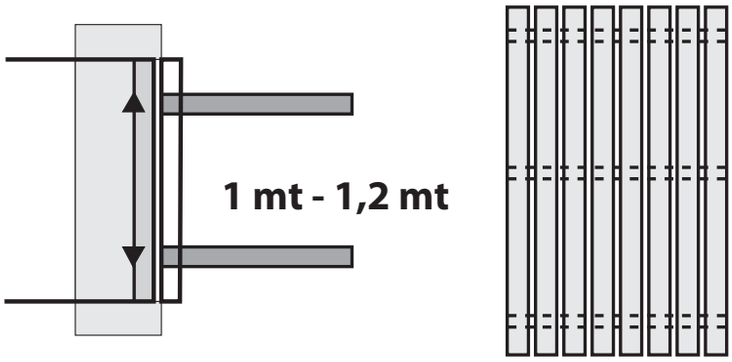


Set maximum fork witdh

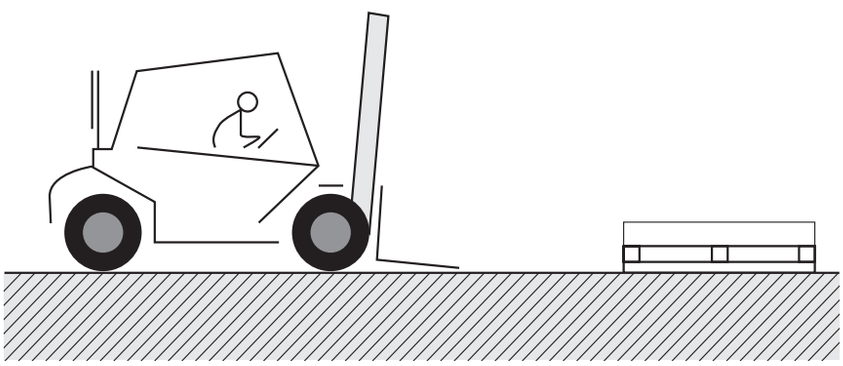

Pick up the pallet slightly
raise the fork

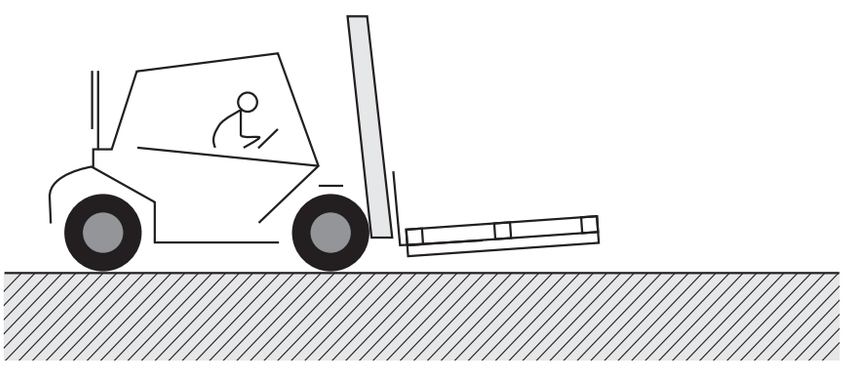

Do not sweep or pull the pallet.
Raise it from the ground to carry.

Individual panels must be lifted off the pallet by two people holding all four corners and not drawn over each other. Carry the panels vertically like below given picture. Wear gloves to avoid staining.

If the composite panels carry inproperly like below given picture , straightness problem is occur along the horizontal axis. In this case warranty conditions of panels become invalid. Gloves should be used when moving the panels, as the corners and edges are sharp, it may cause work accidents, so care should be taken.

If the panel carry improper way, there will be a flatness problem on long axis of panel like left side picture. The panels which have elastic deformation due to improper carrying can be tolerated with rework operation. However it is better to carry it vertically until the place that panel is used.

## 11. PROTECTIVE FILM AND ASSEMBLING DIRECTION

Alutechbond Composite Panels are covered with protective film to prevent any damages during transportation and installation. These protective foils are providing high UV resistance and easy disassembling. Foils must be disassembled with 180 degree angles and disassembling must be done max in 30 days after installation. otherwise if panels are exposed to direct sun light or rain, disassembling foils will be harder and panels are likely to be damaged. Until montage of profiles and during montage the foils must be kept attached on panels. Installation of composite panels must be on the same direction of arrows on the protective foils. Especially in metallic colors this is a very important issue during installation. If the panels are installed in different directions of arrows there will be a color tonality difference on panels. **The protective films which are remained on the composite panels surface more than six months from the invoice date are out of warranty.**

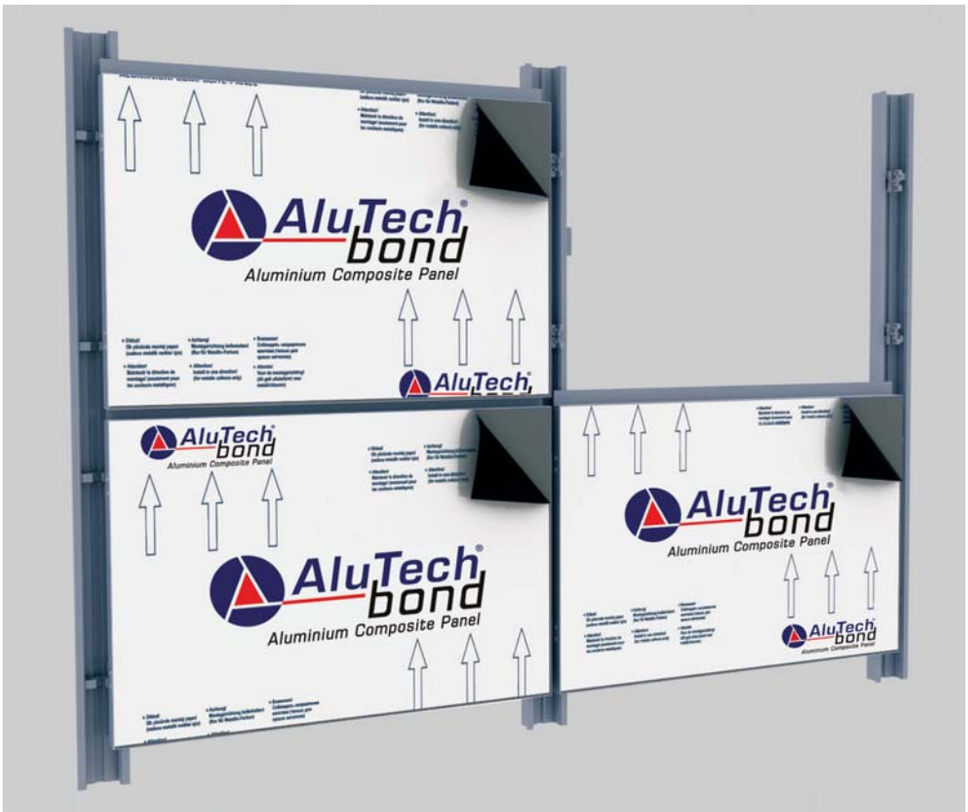


Way of assembling for metallic coloured composite panels are more important than solid coloured composite panels due to spherical particle of metallic pigments.
In metallic colors, making the shade comparison visually is not an accurate control method. For this reason, the dE value should be taken as a basis and this value is required to be <2 according to the TSE EN 13523-3 standard.

Improper Assembling for Metallic Colours

Do not mark the protective film with ink (markers) tapes or labels. Solvent or plasticier may penetrate the film and affect the lacquered surface.

## 12. CLEANING AND MAINTENANCE

In order to protect surface quality of aluminium composite panels for long period, scheduled cleaning and maintenance is needed in every year or every 6 months according to enviromental conditions.

**General conditions about cleaning can be found in below given items.**

- First of all the surface of panels must be washed with plenty water from top to bottom. If pressure washer machine is used, the level of pressure must be below 50 bar.
- The diluted detergent with water can be used on dirt with soft cloth or sponge gently first horizontally then vertically.
- ph values of all detergents and chemicals must be between 6-7. These chemicals can be added into water max % 10.
- Rinsing should be made after cleaning from top of façade to bottom.
- Whole area must be controlled after rinsing. If contamination still observed on the surface, cleaning should be make locally again.

**Improper situations for cleaning operations**

- Do not clean surfaces heated by the sun > 40°C . The quick drying may cause blemishes. Prefer the time that façade is under shadow or temperature is warm.
- Do not use detergent like potasyum hydroxide (KOH) or sodium hydroxide (NaOH).
- Do not use strong acidic detergents and abrassive detergents which is capable to remove paint from the surface. These kind of chemicals are even capable to damage sutures between tiles so they can damage the paint easily .

Improper cleaning

- Do not use organic solvents and thinner for cleaning.
- Do not use dishwasher wire and sandpaper
- Never mix cleaners. Doing so may be ineffective, and worse, very dangerous. For example, mixing chlorine containing materials, such as bleaches, with other cleaning compounds containing ammonia can cause poisonous gas emissions. Always rinse the coated material after removal of heavy surface soil. Do not mix the different chemicals together.

Efectis

TÜRKAK
Test
TS EN ISO/IEC 17025
AB-0556-T

**EFECTIS ERA AVRASYA TEST VE BELGELENDIRME A.Ş.**

Ref. No: EEA-17-000190

**ÖLÇÜLEN DEĞERLER VE TEST SONUÇLARI** / MEASURED VALUES AND THE TEST RESULTS

The mass per unit area of components, used for the calculations:

Inorganic mineral core: 5,5 kg/m² PE adhesive film: 76 g/m² PVDF paint: 92 g/m²

Aluminium plate: 2,42 kg/m² Product as whole: 8,10 kg/m²

| Fire Technical Characteristics | Measured Values 1st | 2nd | 3rd | Results | Expanded Uncertainty |
|---|---|---|---|---|---|
| PCS [MJ/kg] (a) | 2,42 | 2,6 | 2,6 | 2,54 | 0,20 |
| PCS [MJ/kg] (b) | 44,98 | 45 | 45,01 | 45,00 | 0,16 |
| PCS [MJ/kg] (b) | 3,42 | 3,42 | 3,42 | 3,42 | 0,20 |
| PCS [MJ/kg] (c) | 14,01 | 13,74 | 13,92 | 13,89 | 0,16 |
| PCS [MJ/kg] (c) | 1,27 | 1,25 | 1,27 | 1,26 | 0,22 |
| PCS [MJ/kg] (d) | 0,00 | 0,00 | 0,00 | 0,00 | (-) |
| PCS [MJ/kg] (e) | 2,22 | 2,35 | 2,35 | 2,31 | 0,18 |

(-): Not applicable

(a): Inorganic Mineral Core
(b): PE Adhesive Film
(c): PVDF Paint
(d): Aluminium Plate
(e): Product As Whole

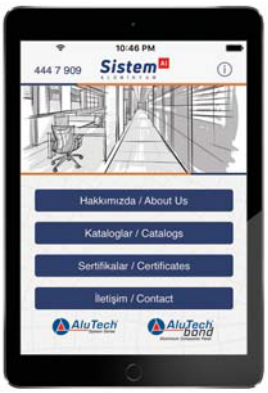


***Kataloğu tabletinize indirin istediğiniz zaman istediğiniz yerde görüntüleyin!***

*Download this catalogue on your ipad, view it anywhere, anytime you wish!*

Download on the App Store

GET IT ON Google Play

Sistem Al
ALÜMİNYUM

**Merkez** / Head Office
Akçaburgaz Mah. 3055. Sk. No.4
34522 Esenyurt / İstanbul - TURKEY
Tel : +90 212 886 87 87
Fax : +90 212 886 53 29

**Fabrika** / Factory
Ergene1 OSB, Vakıflar OSB Mah. D100 Cad.
No: 13/1 59930 Ergene / Tekirdağ - TURKEY
Tel : +90 282 693 27 27

sistem@sistemal.com
**www.sistemal.com**

May 2025